Process Regulators

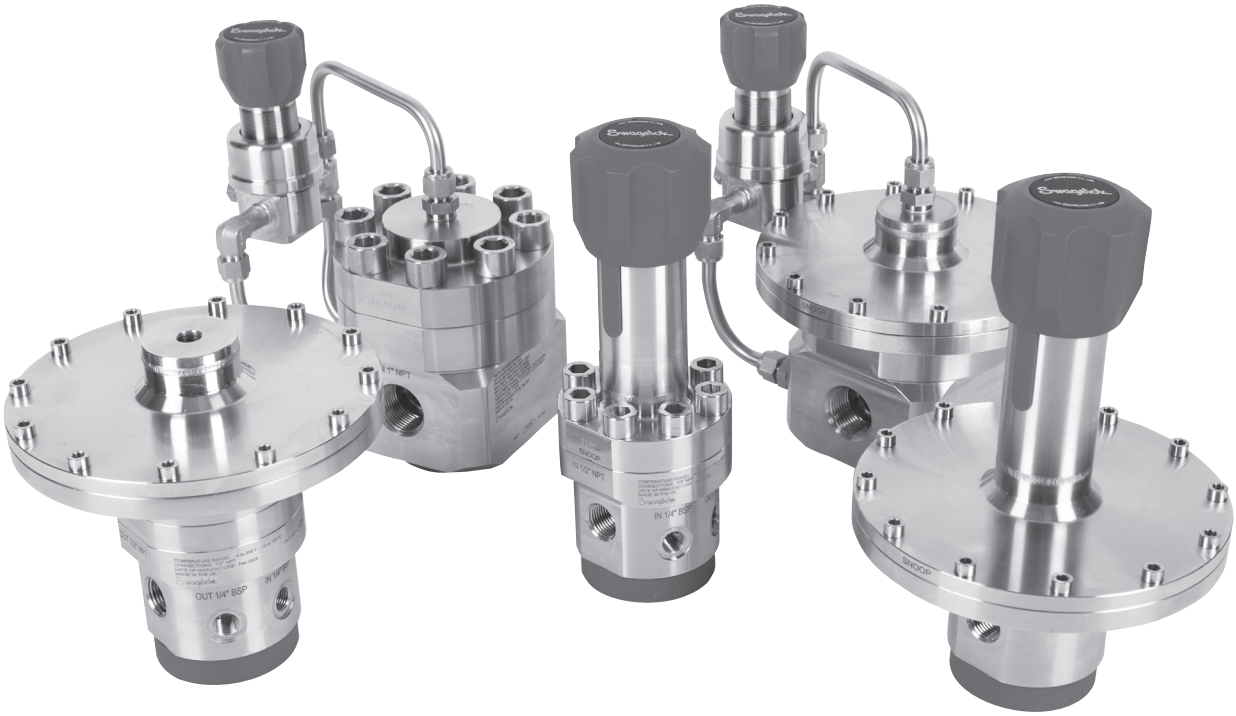

- Pressure-reducing models
- Back-pressure models
- Spring-, dome-, and air-loaded
- 1/2 to 1 1/2 in. end connections
- Working pressures up to 15 225 psig (1 050 bar)
- Temperatures from –49 to 356°F (–45 to 180°C)

Swagelok®

Contents

Features, 3
Process Pressure Regulators Explained, 4
Terminology, 4
Types of Regulators, 5
Regulator Function, 5
Loading Mechanism, 6
Body Size, 8
Body Material, 8
Pressure Control Range, 8
Seat Material, 10
Connection Type, 11
Port Configuration, 12
Auxiliary Port Connection, 13
Seal Material, 14
Sensor Options, 15
Handle Options, 20
Additional Options, 21

Pressure-Reducing Spring-Loaded

General Industrial, Spring-Loaded (SGRS), 22

High Sensitivity, Spring-Loaded (SHRS), 28

High Pressure, Spring-Loaded (SFRS), 33

Pressure-Reducing Dome-Loaded

General Industrial, Dome-Loaded (SGRD), 37

General Industrial, Dome-Loaded Differential (SGRD DP), 43

High Sensitivity, Dome-Loaded (SHRD), 48

Pressure-Reducing Specialty

General Industrial, Ratio (SGRA), 53

Pressure-Reducing Specialty

High Pressure, Ratio (SFRA), 58

Back-Pressure Spring-Loaded

General Industrial, Spring-Loaded (SGBS), 63

High Sensitivity, Spring-Loaded (SHBS), 69

Back-Pressure Dome-Loaded

General Industrial, Dome-Loaded (SGBD), 74

Back-Pressure Specialty

General Industrial, Ratio (SGBA), 80

Electronic Control

Electronic Pressure Controller (SEPC), 85

Panel Mounting, 88
General Maintenance Kits, 89
O-Ring Kits, 89
Handle Kits, 90
Orifice Kits, 90
Custom Maintenance Kits, 90

Features

Handle

Robust handle available in many colors for system identification.

Non-Rising Stem

- Fine-pitched threads provide precise adjustability and resolution
- Roller thrust bearings offer smooth, low-torque actuation

Diaphragm Sensing Mechanism

- Moulded diaphragm with retaining ribs ensures robust leak-tight design
- Support plates limit movement for extended diaphragm life
- Clamped diaphragm assembly has no loose parts to reduce risk of component wear

Optimized Flow Paths

With the use of computational fluid dynamics, the flow paths and feedback designs have been optimized for improved flow (droop) performance.

Balanced Poppet

- All models employ a balanced poppet design to significantly reduce supply pressure effect
- Robust, one-piece poppet used for both low-pressure and high-pressure applications
- Poppet spring retained on poppet to assist maintenance

Piston Sensing Mechanism

Taller multistepped piston improves stability for extended cycle life.

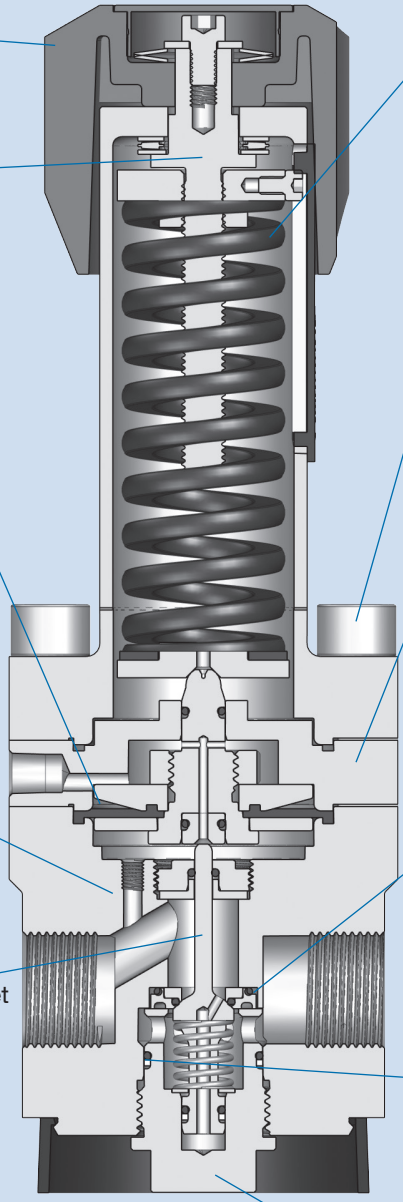

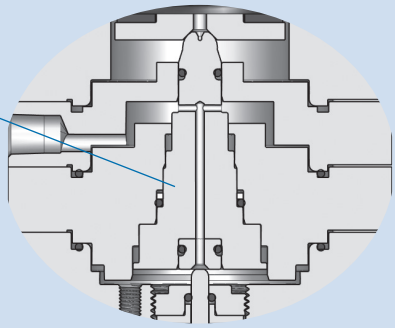

Range Spring

- Provides pressure control across a wide range of flow rates
- Long spring improves droop performance

Robust Design

- Designed to ASME B31.1 and B31.3
- Bolting capacity allows outlet design pressure to equal inlet design pressure

Modular Design

Allows options for:

- Captured vent
- Self-vent
- Ratio loading
- Piston sensing

to be readily incorporated while supporting ease of maintenance

Floating Seat

- Patented floating seat design for improved sealing reliability
- The floating seat design allows simple maintenance of the main sealing element of the regulator

Seal Materials

Available in a variety of materials for enhanced chemical compatibility in a wide range of applications.

Body Plug

One-tool maintenance across all sizes, just remove the body plug and replace the seat.

Process Pressure Regulators Explained

The process regulator's part number is built to fully define the regulator's function. The following sections will expand on the purpose of each element of the part number and explain its impact on key aspects of process pressure regulators to aid in making the best selection for your application.

Example SGRS part number:

1 2 3	4	5	6	7	8	9	10	11	12	13	14
SGRS	12	1	F	E	N0	A	0	V	A	R	000

Breakdown of each element

Series { 1 Type of Regulator ..... Page 5
2 Regulator Function ..... Page 5
3 Loading Mechanism ..... Page 6
4 Body Size ..... Page 8
5 Body Material ..... Page 8
6 Pressure Control Range ..... Page 8
7 Seat Material ..... Page 10
8 Connection Type ..... Page 11
9 Port Configuration ..... Page 12
10 Auxiliary Port Connection ..... Page 13
11 Seal Material ..... Page 14
12 Sensor Options ..... Page 15
13 Handle Options ..... Page 20
14 Additional Options ..... Page 21

Terminology

Accumulation—an increase in inlet pressure caused by an increase in flow rate through a back-pressure regulator.

Creep—an increase in outlet pressure typically caused by regulator seat leakage.

C_v—the regulator's maximum valve flow coefficient; can be used for approximate sizing and to calculate max flow for downstream PRVs. To correctly size a pressure regulator, be sure to use its flow curve.

Dependency—see supply pressure effect (SPE).

Droop—a decrease in outlet pressure caused by an increase in flow rate through a pressure-reducing regulator.

Lockup—an increase in outlet pressure that occurs as the flow rate is decreased to zero.

Sensitivity—the degree to which the regulator responds to force balance changes.

Set pressure—the desired setpoint of a pressure regulator, normally stated as a no-flow condition.

Supply pressure effect (SPE)—the effect on the set pressure of a pressure-reducing regulator as a result of a change in inlet pressure, normally experienced as an increase in outlet pressure due to a decrease in inlet pressure. Also known as Dependency.
ΔP (Outlet) = ΔP (Inlet) $\times$ SPE

For more information and training on pressure regulators, please visit our regulator section on swagelok.com.

Types of Regulators 1

The first two ordering number designators break down as follows:

Swagelok General Industrial (SG)

- Maximum design pressure 6000 psig (413 bar)
- Suitable for a wide range of industrial applications

Swagelok High Sensitivity (SH)

- Maximum design pressure 250 psig (17.2 bar)
- When more accurate pressure control and increased sensitivity are required

Regulator Function 2

There are two functions of process pressure regulators

- *Pressure-reducing* regulators
- *Back-pressure* regulators

How a Pressure Regulator Works

A pressure regulator has a sensing element (piston or diaphragm) which, on one side, is subjected to a load force (F_S) created by a spring (as shown below) or gas pressure. On the other side, the sensing element is subject to the force (F) of the system fluid.

Pressure-Reducing Regulators (R)

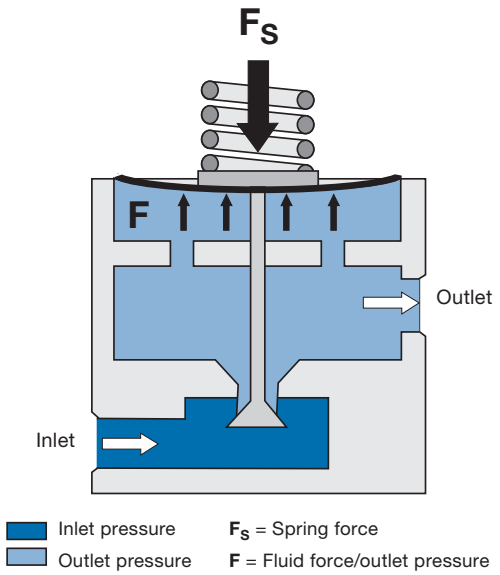

The function of a pressure-reducing regulator is to reduce a pressure and to keep this pressure as constant as possible while the inlet pressure and the flow may vary. This is accomplished by the fluid force (F) being equal to or slightly lower than load force (F_S), causing the poppet to open.

Back-Pressure Regulators (B)

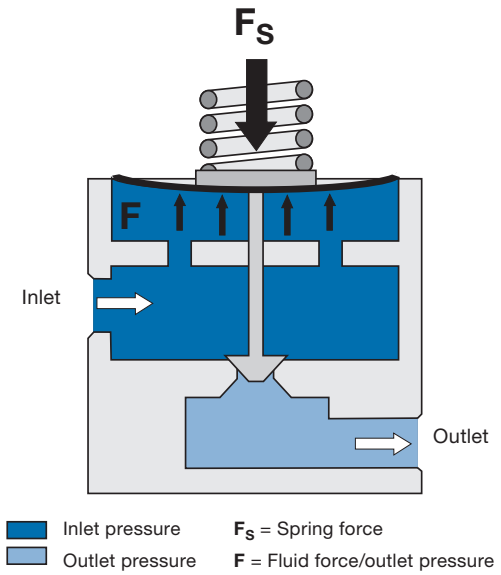

The function of a back-pressure regulator is to keep inlet pressure below a set pressure. This means the regulator can either **open** in case of excess pressure or **close** when the pressure drops below a desired pressure. This is accomplished by the fluid force (F) being equal to or slightly lower than load force (F_S), causing the poppet to close.

Loading Mechanism 3

The loading mechanism is the component of the regulator that balances the force or pressure exerted on the sensing mechanism by the system media. Spring, dome, or a combination spring- and dome-loading mechanisms are available.

The illustrations below show pressure-reducing configurations.

Spring-Loaded (S)

In a spring-loaded regulator, a coil spring is used to generate a load (F_S) against the sensing mechanism. The amount of spring force or load can be adjusted by turning the handle of the regulator.

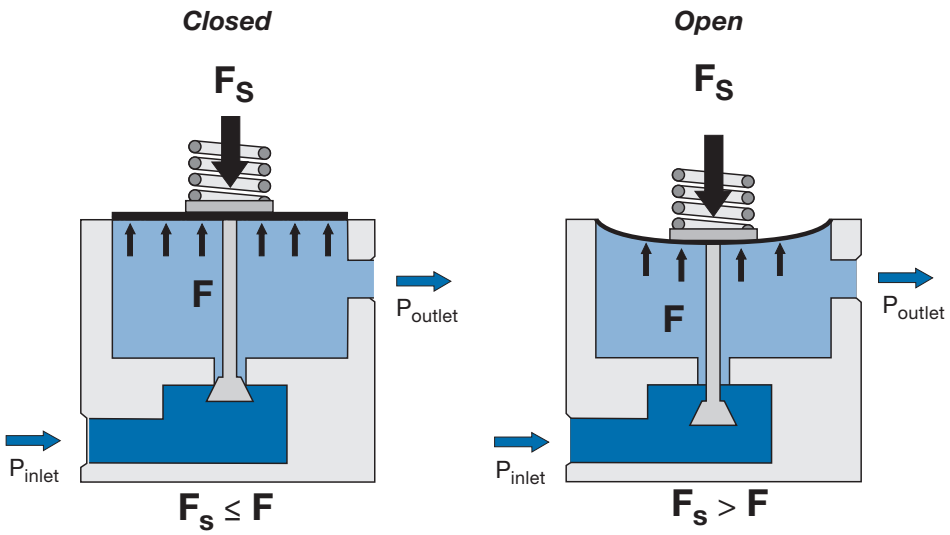

Dome-Loaded (D)

In a dome-loaded regulator, a gas is fed into the dome chamber above the sensing mechanism at a pressure equal to or slightly above the required outlet pressure. This volume of gas is used like a spring. The dome pressure (F_d) is typically supplied by a second regulator called a pilot regulator.

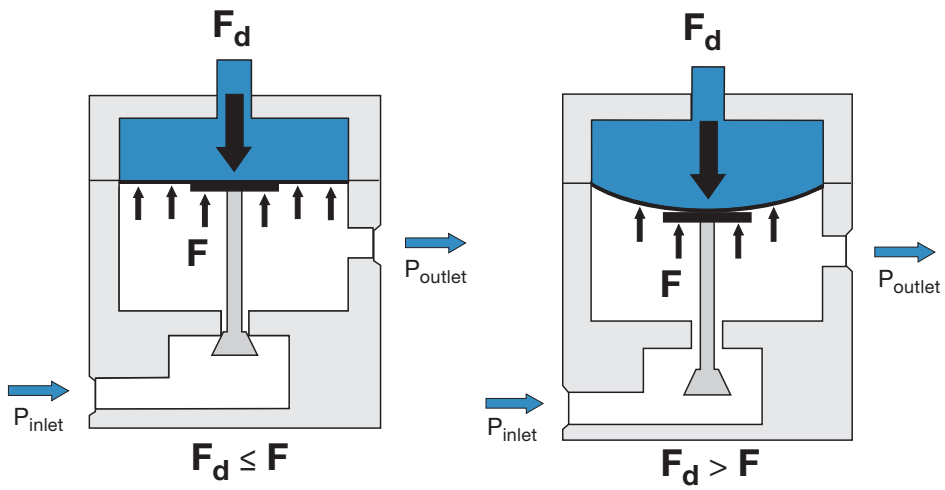

Air-Loaded Ratio (A)

A ratio regulator is a special type of dome-loaded regulator. The surface area of the dome-sensing mechanism is a different size than that of the outlet pressure sensing mechanism. This enables a lower dome pressure to exert a large force (F_d) relative to the force due to a larger outlet pressure (F). Therefore, small dome pressures can control larger outlet pressures at a fixed ratio.

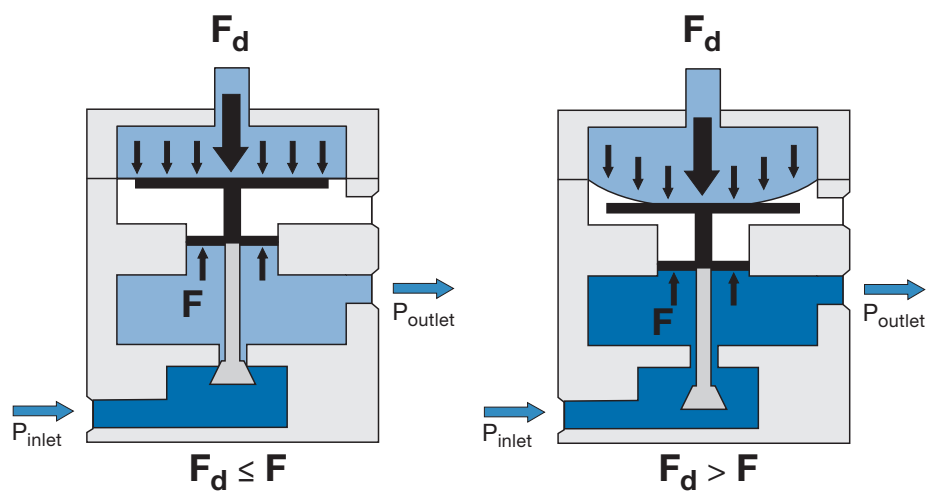

Regulator Series

Swagelok® process pressure regulators are listed below.
The first four ordering number designators combine to define the regulator series:

Series	Description	Features	Size	Maximum Design Pressure, psig (bar)	Maximum Control Pressure, psig (bar)	C_v	Page
SGRS	General service, pressure-reducing, spring-loaded.	Controls downstream pressure. Simple robust design.	08	6000 (413)		1.95	22
			12	6000 (413)		2.30	
			16	6000 (413)	3600 (248)	4.80	
			24	6000 (413)	3600 (248)	10.70	
SFRS	High pressure, pressure reducing, spring-loaded.	Controls downstream high-pressure. Simple robust design.	09	15 228 (1 050)	12 690 (875)	1.95	33
SGRD	General service, pressure-reducing, dome-loaded.	Controls downstream pressure. Highly customizable performance.	12	6000 (413)		2.30	37
			16	6000 (413)		4.80	
			24	6000 (413)		10.70	
SGRA	General service, pressure-reducing, ratio-loaded.	Controls downstream pressure. Can be controlled with low-pressure feed.	08	6000 (413)		1.95	53
			12	6000 (413)		2.30	
SGBS	General service, back-pressure, spring-loaded.	Controls upstream pressure. Simple robust design.	08	6000 (413)		1.95	63
			12	6000 (413)		2.30	
			16	6000 (413)	3600 (248)	4.80	
			24	6000 (413)	3600 (248)	10.70	
SGBD	General service, back-pressure, dome-loaded.	Controls upstream pressure. Highly customizable performance.	12	6000 (413)		2.30	74
			16	6000 (413)	4000 (275)	4.80	
			24	6000 (413)	4000 (275)	10.70	
SGBA	General service, back-pressure, ratio-loaded.	Controls upstream pressure. Can be controlled with low pressure.	08	6000 (413)		1.95	80
			12	6000 (413)		2.30	
SHRS	High sensitivity, pressure-reducing, spring-loaded.	Controls downstream pressure. Simple robust design. Improved sensitivity for low-pressure applications.	08	250 (17.2)	50 (3.4)	1.95	28
			12	250 (17.2)	50 (3.4)	2.30	
			16	250 (17.2)	50 (3.4)	4.80	
			24	250 (17.2)	50 (3.4)	10.70	
SHRD	High sensitivity, pressure-reducing, dome-loaded.	Controls downstream pressure. Highly customizable performance. Improved sensitivity for low-pressure applications.	12	250 (17.2)		2.30	48
			16	250 (17.2)		4.80	
			24	250 (17.2)		10.70	
SFRA	High pressure, pressure reducing, ratio-loaded.	Controls downstream high-pressure. Can be controlled with low-pressure feed.	09	15 228 (1 050)	14 500 (1 000)	1.95	58
SHBS	High sensitivity, back-pressure, spring-loaded.	Controls upstream pressure. Simple robust design. Improved sensitivity for low-pressure applications.	08	250 (17.2)	50 (3.4)	1.95	69
			12	250 (17.2)	50 (3.4)	2.30	
			16	250 (17.2)	50 (3.4)	4.80	
			24	250 (17.2)	50 (3.4)	10.70	
SEPC	Electronic Pressure controller.	Controls downstream pressure, is controller by 4-20ma signal. Can be used in conjuction with dome and ratio-loaded regulators.	N/A	250 (17.2)		0.02	85

Body Size 4

Swagelok process pressure regulators are offered in multiple body sizes that correspond to the standard connection size of the body.

Series and Body Size Combinations

Series	Body Size				
	08	09	12	16	24
Connection, in.	1/2	9/16	3/4	1	1 1/2
C_v	1.95	1.95	2.30	4.80	10.70
Seat Diameter, mm	10,0	10,0	10,0	14,0	22,0
SGRS	Y		Y	Y	Y
SGRD	Y①		Y	Y	Y
SGRA	Y		Y		
SGBS	Y		Y	Y	Y
SGBD	Y①		Y	Y	Y
SGBA	Y		Y		
SHRS	Y		Y	Y	Y
SHRD	Y①		Y	Y	Y
SHBS	Y		Y	Y	Y
SFRA		Y			
SFRS		Y			

① Not available with a pilot regulator.

Body Material 5

Swagelok process pressure regulators are available in the following body materials.

Body Material

Designator	Material	Additional Specifications
1	316L SS	Cleaning and packaging in accordance with Swagelok *Standard Cleaning and Packaging (SC-10)* catalog, MS-06-62.
C	316L SS, SC-11	Cleaning and packaging in accordance with Swagelok *Special Cleaning and Packaging (SC-11)* catalog, MS-06-63, in accordance with product cleanliness requirements stated in ASTM G93 Level C.
N	316L SS, NACE	Materials are selected in accordance with NACE MR0175/ISO 15156. Cleaning and packaging in accordance with Swagelok *Standard Cleaning and Packaging (SC-10)* catalog, MS-06-62.
P	316L SS, NACE, SC-11	Materials are selected in accordance with NACE MR0175/ISO 15156. Cleaning and packaging in accordance with *Special Cleaning and Packaging (SC-11)* catalog, MS-06-63, to ensure compliance with product cleanliness requirements stated in ASTM G93 Level C.

Pressure Control Range 6

The pressure control range defines the dynamic set pressure the regulator will be able to achieve. For best performance, select a pressure control range as close to the desired set pressure as possible. Regulators perform best at the higher end of their control range. Regulators will still function below the listed minimum adjustment range, but will not maintain listed performance.
Note: When regulators are not flowing, it is possible to set the regulator up to 5% higher than this value.

Sensor Type

The sensing mechanism is the component separating the spring/dome force and the fluid force. It senses changes in pressure and allows the regulator to react and try to restore the original set pressure. The regulator series and pressure control range selected will determine the sensor type used. Swagelok process pressure regulators utilize two types of sensor.

Diaphragm Sensing

A diaphragm is a large, flat piece of material usually made of an elastomer. A diaphragm is normally used for low set pressure applications in spring-loaded regulators and in all dome-loaded regulators.

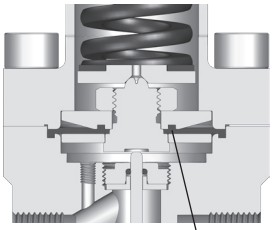

Piston Sensing

A piston is a cylindrical metal component which is generally used for higher set pressure applications in spring-loaded regulators. They are also more resistant to damage caused by pressure spikes than diaphragms.

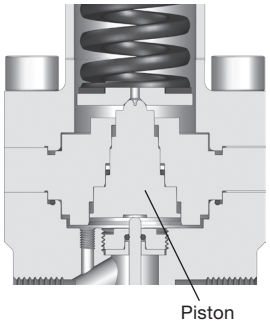

Pressure Control Ranges

	Series	SHRS	SGRS		SHBS	SGBS		SFRS
	Size	08, 12, 16, 24	08, 12	16, 24	08, 12, 16, 24	08, 12	16, 24	09
Designator	Control Range psig (bar)	Sensor Type						
C	1 to 10 (0.07 to 0.68)	Diaphragm	–		Diaphragm	–		–
D	2.5 to 25 (0.2 to 1.7)	Diaphragm	–		Diaphragm	–		–
E	5 to 50 (0.3 to 3.4)	Diaphragm	Diaphragm		Diaphragm	Diaphragm		–
F	10 to 100 (0.7 to 6.8)	–	Diaphragm		–	Diaphragm		–
G	25 to 250 (1.7 to 17.2)	–	Diaphragm	①	–	Diaphragm		–
H	37 to 375 (2.6 to 25.8)	–	Diaphragm	Piston	–	Diaphragm	Piston	–
J	50 to 500 (3.4 to 34.4)	–	Piston		–	Piston		–
L	100 to 1000 (6.9 to 68.9)	–	Piston		–	Piston		–
M	150 to 1500 (10.3 to 103)	–	Piston		–	Piston		–
N	200 to 2000 (13.7 to 137)	–	Piston		–	Piston		–
P	300 to 3000 (20.6 to 206)	–	Piston		–	Piston		–
R	360 to 3600 (24.8 to 248)	–	Piston		–	Piston		–
W	600 to 6000 (41.3 to 413)	–	Piston	–	–	Piston	–	–
Y	1269 to 12 690 (87 to 875)	–	–	–	–	–	–	Piston

① Elastomer seat = diaphragm, polymer seat = piston.

	Series	SHRD	SGRD	SGBD	SGRA	SGBA	SFRA
	Size	08, 12, 16, 24	08, 12, 16, 24	08, 12, 16, 24	08, 12	08, 12	09
Designator	Control Range psig (bar)	Sensor Type					
0	1 to 250 (0.07 to 17.2)	Diaphragm	–	–	–	–	–
0	5 to 6000 (0.3 to 413)	–	Diaphragm	Diaphragm	–	–	–
1	Ratio 1:5	–	–	–	Diaphragm	Diaphragm	–
2	Ratio 1:15	–	–	–	Piston	Piston	–
3	Ratio 1:40	–	–	–	Piston	Piston	–
4	Ratio 1:70	–	–	–	Piston	Piston	–
5	Ratio 1:150	–	–	–	–	–	Piston
C	1 to 10 (0.07 to 0.68)	Diaphragm	Diaphragm	Diaphragm	–	–	–
D	2.5 to 25 (0.2 to 1.7)	Diaphragm	Diaphragm	Diaphragm	–	–	–
E	5 to 50 (0.3 to 3.4)	Diaphragm	Diaphragm	Diaphragm	–	–	–
F	10 to 100 (0.7 to 6.8)	Diaphragm	Diaphragm	Diaphragm	–	–	–
G	25 to 250 (1.7 to 17.2)	Diaphragm	Diaphragm	Diaphragm	–	–	–
H	37 to 375 (2.6 to 25.8)	–	–	–	–	–	–
J	50 to 500 (3.4 to 34.4)	–	Diaphragm	Diaphragm	–	–	–
L	100 to 1000 (6.9 to 68.9)	–	Diaphragm	Diaphragm	–	–	–
M	150 to 1500 (10.3 to 103)	–	Diaphragm	–	–	–	–
N	200 to 2000 (13.7 to 137)	–	Diaphragm	Diaphragm	–	–	–
P	300 to 3000 (20.6 to 206)	–	Diaphragm	Diaphragm	–	–	–
R	360 to 3600 (24.8 to 248)	–	Diaphragm	Diaphragm	–	–	–
W	600 to 6000 (41.3 to 413)	–	Diaphragm	–	–	–	–

Seat Material 7

The seat is the primary sealing element of a pressure regulator. It forms a seal between the high-pressure and low-pressure chambers within the regulator. Swagelok process pressure regulators can have a hard or soft seat seal depending on the application pressure requirements. The seat is the component most susceptible to damage during operation, particularly if there is debris in the system.

Elastomer Seat

A soft seat seal utilizes an elastomer O-ring which seals against a metal poppet. It is designed to regulate pressures up to 1000 psig (68.9 bar). The seat materials include FKM, nitrile, and EPDM. Soft seats are highly resilient to damage caused by debris in the system.

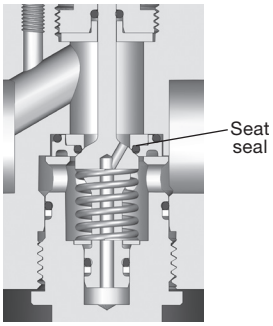

PEEK Seat

A hard seat seal utilizes a polymer seat which seals against a metal poppet. It is designed to regulate pressures up to 6000 psig (413 bar). The seat material is PEEK.

Note: For size 08 and 12 back pressure regulators, the seat will be supported by an O-ring. For size 16 and 24 regulators operating at or above pressure range N, the seat will be supported by a 316 stainless steel ring.

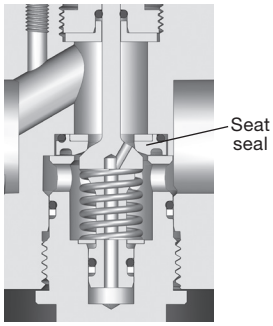

Seat Material Options

Swagelok process pressure regulators are available with the following seat material options.

Designator	Seat Material	Maximum Inlet Pressure, psig (bar)	SFRA Max Inlet Pressure, psig (bar)
E	Elastomer	1000 (68.9)	—
P	PEEK	6000 (413)	15 228 (1 050)

Balanced Poppet Controlling Mechanism

The controlling mechanism, also known as a poppet, is the moving valve element which opens and closes against the seat. In a balanced poppet design, the area on which the inlet pressure acts is reduced due to the orifice through the poppet and balancing O-ring. The advantages of this design are a reduced seat load, less sensitivity to SPE, and the ability to have a larger seat for more flow.

Connection Type 8

Swagelok process pressure regulators are offered with a variety of inlet and outlet connection types. Connection sizes match the body size unless stated otherwise. The regulator pressure rating may be limited by end connection type. For additional connection options, please contact your local authorized Swagelok sales and service center.

Threaded Connections

Threaded	Maximum Pressure Rating psig (bar)	Connection Size, in.			
		1/2	3/4	1	1 1/2
		Body Size			
		08	12	16	24
Female NPT pipe threads	6000 (413)	N0		N4	N0
Female ISO/BSP parallel threads	6000 (413)	B0		B4	B0

ASME B16.5 Flanges

Flange Class and Facing	Maximum Pressure Rating psig (bar)	Connection Size, in.			
		1/2	3/4	1	1 1/2
		Body Size			
		12		16	24
Class 150 raised face smooth	275 (18.9)	FG	FA	FN	FA
Class 300 raised face smooth	719 (49.6)	FH	FB	FP	FB
Class 600 raised face smooth	1440 (99.3)	FJ	FC	FR	FC
Class 1500 raised face smooth	3600 (248)	FL	FE	FT	FE
Class 2500 raised face smooth	6000 (413)	FM	FF	FU	FF
Class 300 RTJ	719 (49.6)	GH	GB	GP	GB
Class 600 RTJ	1440 (99.3)	GJ	GC	GR	GC
Class 1500 RTJ	3600 (248)	GL	GE	GT	GE
Class 2500 RTJ	6000 (413)	GM	GF	GU	GF

EN 1092 (DIN) Type 11 Flanges

Flange Class and Facing	Maximum Pressure Rating psig (bar)	Connection Size, in.			
		1/2	3/4	1	1 1/2
		Body Size			
		12		16	24
EN class PN40	580 (40)	DB	DN	D1	DN

High Pressure Connections

Connection Type	Maximum Pressure Rating psig (bar)	Connection Size, in.	
		1/2	9/16
		Body Size	
		09	
IPT	15 228 (1 050)	-	V0
FK	15 228 (1 050)	K2	-

Port Configuration 9

Swagelok process pressure regulators are available in a variety of port configurations. The table below shows the port layout as viewed from the top of a regulator.

Regulator Type	A	B	C	D	G	F	M
Pressure-Reducing (SGRS, SHRS, and SGRA. Also SGRD and SHRD without a pilot.)	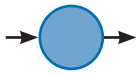	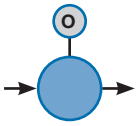	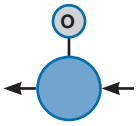			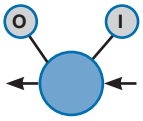	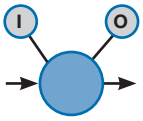
Back-Pressure (SGBS, SHBS, and SGBA. Also SGBD without a pilot.)	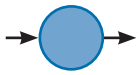			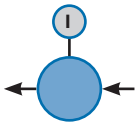	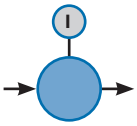	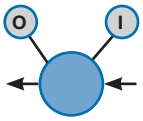	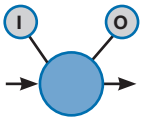
Pressure-Reducing with Pilot (SGRD. SHRD with pilot.)							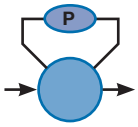
Back-Pressure with Pilot (sizes 12 to 24) (SGBD with pilot.)						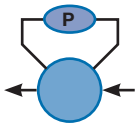	

→ Main inlet/outlet port	I Auxiliary inlet port	O Auxiliary outlet port	P Pilot regulator

Port Configuration and Size Combinations

Regulator Function	Port Designator	Body Size			
		08	12	16	24
Pressure-Reducing	A	Y	Y	Y①	Y①
	B	Y	Y		
	C	Y	Y		
	F	Y	Y		
	M	Y	Y	Y	Y
Back-Pressure	A	Y	Y	Y①	Y①
	D	Y	Y		
	G	Y	Y		
	F	Y	Y	Y	Y
	M	Y	Y		

① This configuration is an M port body with both auxiliary ports plugged.

Auxiliary Port Connection 10

Swagelok process pressure regulators are available with a selection of auxiliary port options. Auxiliary ports are any port other than the main inlet/outlet connections. These regulators will ship without plugs or fittings except when a pilot regulator is specified for the main regulator.

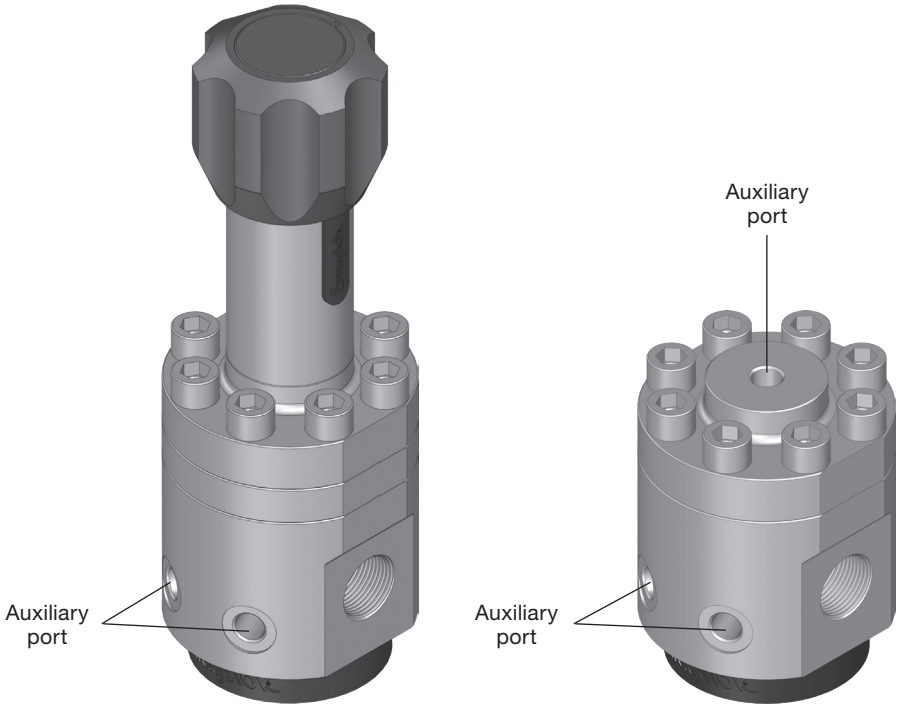

Auxiliary Port Options

Connection Type (Inlet / Outlet)	Auxiliary Port	Body Size			
		08	12	16	24
BSP ISO 228	None	0	0		
BSP ISO 228	Gauge/Vent/Dome	B	B	B	B
BSP ISO 228	Pilot regulator fitted	B	B	B	B
NPT	None	0	0		
NPT	Gauge/Vent/Dome	N, B	N, B	B	B
NPT	Pilot regulator fitted	B	B	B	B
Welded①	None		0		
Welded①	Gauge/Vent/Dome		B	B	B
Welded①	Pilot regulator fitted		B	B	B

① e.g. ASME flanges.

0 = Not applicable, there are no auxiliary ports to define
B = BSP (ISO 228) female
N = NPT female

Note: Auxiliary ports are typically 1/4 in. size, and vent ports are typically 1/8 in. size. See series drawings for more details.

Seal Material 11

Swagelok process pressure regulators are available with a variety of elastomer diaphragm and O-ring seal options. The seal material selected may limit the operating pressures and temperatures of the regulator. The materials selected must be compatible with the system media.

Seal Materials

Designator	Material
V	Fluorocarbon FKM
N	Nitrile
E	EPDM
L	Low-Temp Nitrile

Pressure-Temperature Ratings

Swagelok High Sensitivity (SH)

Seat Material: Elastomer
Body Material: 316/316L
Elastomer Material: Nitrile, FKM, EPDM, or LT-Nitrile

Temperature °F (°C)	Working Pressure psig (bar)			
	Nitrile	FKM	EPDM	LT-Nitrile
–49 (–45)	–	–	–	250 (17.2)
–4 (–20)	250 (17.2)	–	250 (17.2)	250 (17.2)
5 to 95 (–15 to 80)	250 (17.2)	250 (17.2)	250 (17.2)	250 (17.2)
212 (100)	210 (14.5)	210 (14.5)	210 (14.5)	210 (14.5)
302 (150)	–	188 (13)	–	–
356 (180)	–	188 (13)	–	–

Swagelok General Industrial (SG)

Seat Material: Elastomer
Body Material: 316/316L
Elastomer Material: Nitrile, FKM, EPDM, or LT-Nitrile

Temperature °F (°C)	Working Pressure psig (bar)			
	Nitrile	FKM	EPDM	LT-Nitrile
–49 (–45)	–	–	–	1000 (68.9)
–4 (–20)	1000 (68.9)	–	1000 (68.9)	1000 (68.9)
5 to 95 (–15 to 80)	1000 (68.9)	1000 (68.9)	1000 (68.9)	1000 (68.9)
212 (100)	1000 (68.9)	1000 (68.9)	1000 (68.9)	1000 (68.9)
302 (150)	–	1000 (68.9)	–	–
356 (180)	–	1000 (68.9)	–	–

Seat Material: PEEK
Body Material: 316/316L
Elastomer Material: Nitrile, FKM, EPDM, or LT-Nitrile

Temperature °F (°C)	Working Pressure psig (bar)			
	Nitrile	FKM	EPDM	LT-Nitrile
–40 (–40)	–	–	–	6000 (413)
–4 (–20)	6000 (413)	–	6000 (413)	6000 (413)
23 to 95 (–5 to 80)	6000 (413)	6000 (413)	6000 (413)	6000 (413)
212 (100)	5175 (357)	5175 (357)	5175 (357)	5175 (357)
302 (150)	–	3600 (248)	–	–
356 (180)	–	1450 (100)	–	–

Swagelok High Pressure (SF)

Seat Material: PEEK
Body Material: 316/316L
Elastomer Material: EPDM

Temperature °F (°C)	Working Pressure psig (bar)
	EPDM
–40 (–40)	15 228 (1 050)
–4 (–20)	
185 (85)	

Sensor Options 12

The sensor is the component that senses and reacts to the pressure in the system media. Swagelok process pressure regulators are available with a variety of sensor options.

Spring-Loaded Regulator Sensor Option

A = Non-venting

Considered the standard configuration. In the event of a sensor seal failure, system media would be vented to atmosphere.

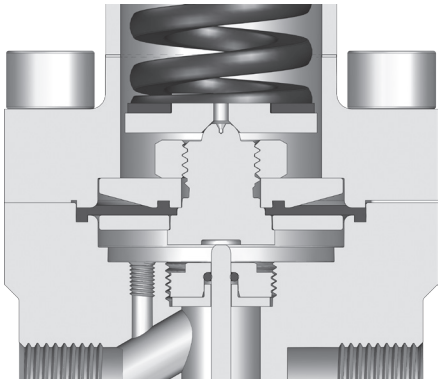

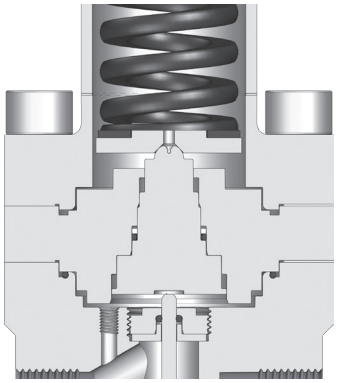

B = Self-venting

Self-venting regulators allow system media to be vented from the regulator when the set pressure is reduced. This allows regulator set pressures to be adjusted in a non-flow situation. Media is vented through a threaded auxiliary vent port, enabling it to be vented to a remote location if required.

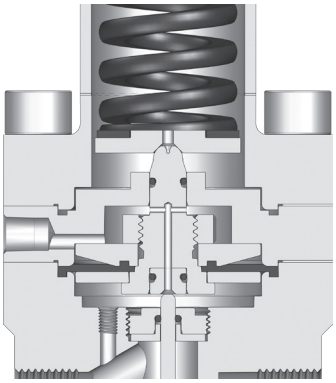

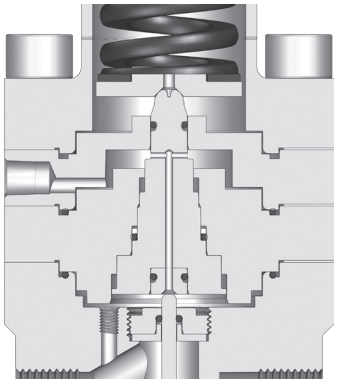

C = Captured Vent

Captured vent regulators function in the same manner as non-venting regulator. However, in the event of a sensor seal failure, system media will be vented though a dedicated threaded auxiliary vent port.

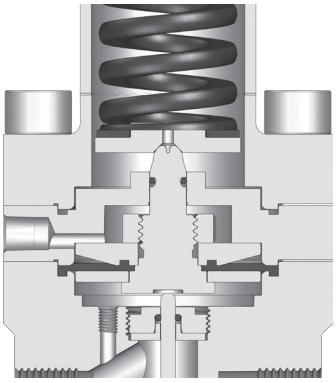

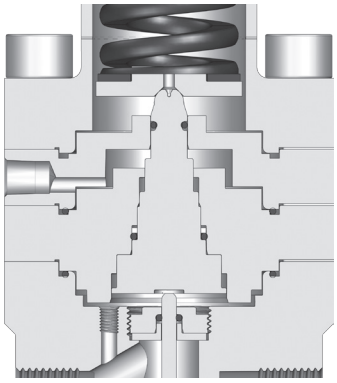

Dome-Loaded Regulator Sensor Option

For dome-loaded regulators, the dome pressure of the regulator controls the set pressure. There are several methods available for supplying and controlling the dome pressure.

The examples found below are based on pressure-reducing configurations. Contact your authorized Swagelok sales and service center for more information on back-pressure schematics.

A = No pilot regulator (must be selected with control range 0).

In this setup, the dome pressure is supplied from an independent source, such as a cylinder or main supply. A typical setup allows a pilot regulator to be in a state of constant low flow, venting to atmosphere. This setup provides good dynamic and lockup performance. Another option is to have a closed-dome setup where the pilot pressure is "trapped" in the dome. However, care must be taken to understand how the setpoint will be set and altered in the field. Contact your authorized sales and service center for more information.

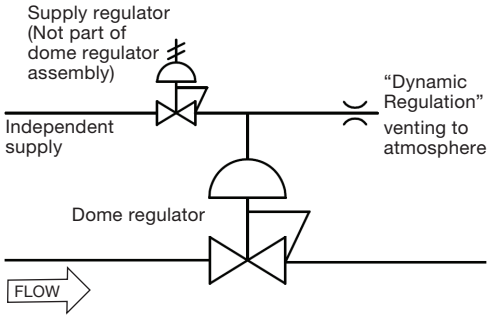

D = Standard pilot regulator

The primary regulator will be provided with the appropriate pilot regulator (pressure-reducing or back-pressure) for the main regulator function. The pilot is plumbed through an orifice to flow into the outlet of the main regulator during normal flow conditions. This option provides dynamic control and good flow performance; however, lockup is typically greater than with other setups.

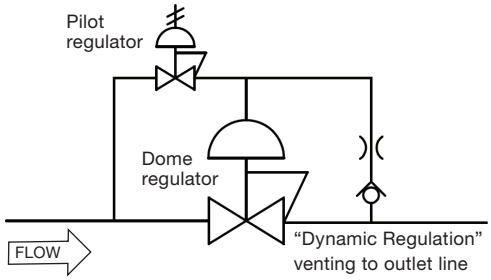

E = External feedback pilot regulator

Used for improved flow performance and reduced lockup. The regulator will be configured in a way that requires a connection to be made between the pilot regulator and the main regulator pipework. This will enable the pilot regulator to more accurately control the main regulator, compensating for droop and lockup by changing the dome pressure in response to the downstream outlet pressure.

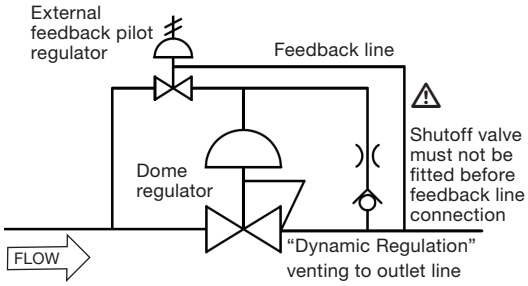

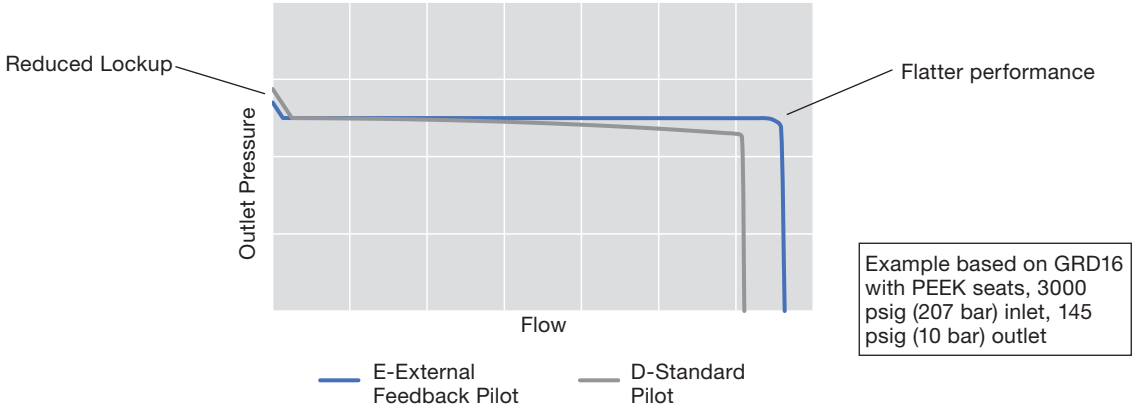

K = Captured vent pilot regulator

Captured vent pilot regulators function in the same manner as non-venting pilot regulators. However, in the event of a sensor seal failure, system media will be vented though a dedicated threaded auxiliary vent port.

M = Dual-stage pilot regulator

For improved SPE performance. Dual-stage pilot regulators will significantly reduce the effect of a fluctuating or depleting inlet pressure on the primary regulator's set pressure.

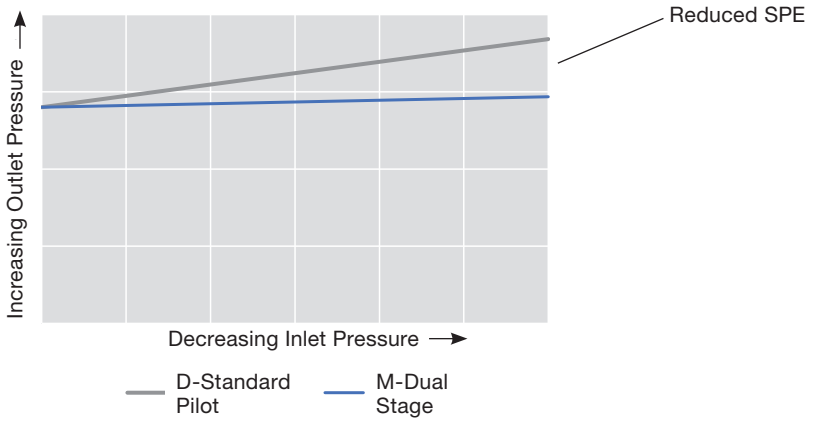

F = Differential-pressure pilot regulator

Differential-pressure pilots use a combination dome- and spring-loading mechanism. A reference pressure is fed into the dome. The spring can be set to add an additional bias force to the top of the sensor. The set pressure of the main regulator will then be the reference pressure plus the bias. This set pressure is only limited by the maximum pressure rating of the regulator. For regulators with a differential-pressure pilot, the control range selected in the part number defines the pilot bias range.

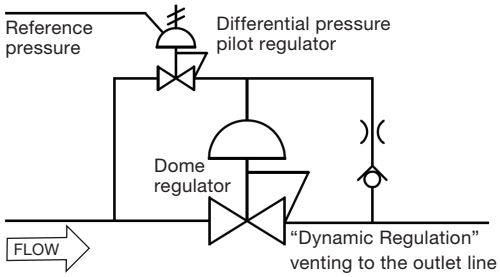

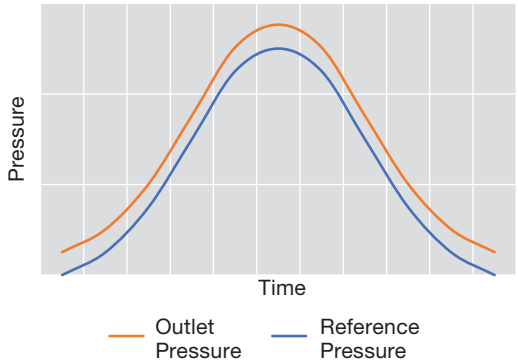

Outlet pressure is set to be 14.5 psig (1 bar) above the reference pressure. As the reference pressure increases the outlet tracks it, maintaining a 14.5 psig (1 bar) differential. This is assuming a constant flow, and stable inlet pressure.

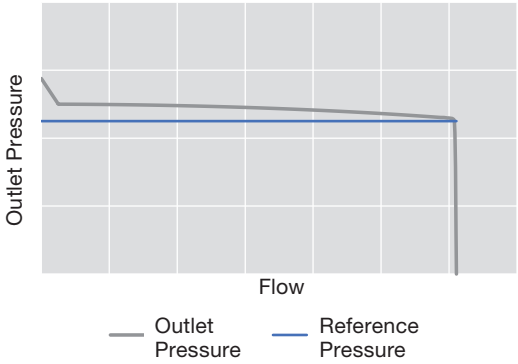

The actual differential can be affected by a number of conditions. If the regulators flow demand changes significantly, droop could cause the differential to decrease as flow is increased. Supply pressure effect would decrease the differential as inlet pressure dropped, thus a constant supply is recommended.

Note: Some differential pressure situations will not require the flow performance of a full process regulator. For low-flow situations, a KDP K-Series regulator can be used as a standalone unit rather than as a pilot. Flow performance would be comparable to a 0.06 C_v KPR regulator (see *Pressure Regulators, K Series*, MS-02-230). To order a differential regulator with 1/4 in. NPT connections, 6000 psig (413 bar) ratings, and a flow coefficient of 0.06 C_v, use the part number:

		2					6				
KDP	**1**	**C**	**W**	**A**	**4**		**C**	**2**	**V**	**3**	**0000**

2 Pressure Control Range

- **C** = 0 to 10 psig (0.07 to 0.68 bar)
- **D** = 2.5 to 25 psig (0.2 to 1.7 bar)
- **E** = 5 to 50 psig (0.3 to 3.4 bar)
- **F** = 10 to 100 psig (0.7 to 6.8 bar)
- **G** = 25 to 250 psig (1.7 to 17.2 bar)
- **J** = 50 to 500 psig (3.4 to 34.4 bar)

6 Seat Material

- **C** = PEEK / FKM
- **M** = PEEK / Buna N
- **N** = PEEK / EPDM
- **V** = PEEK / Low-temp nitrile

Pilot Regulator – Materials of Construction

Component		Material / Specification
Pilot Components	**1** Handle	Nylon with 316 SS insert
	2 Spring button	Zinc-plated steel or 316 SS
	3 Spring stabilizer	301 SS
	4 Upper spring button	316 SS or zinc-coated/-plated steel, depending on configuration
	5 Stem	316 SS
	6 Stem nut	
	7 Body cap	
	Non-wetted lubricant	Hydrocarbon-based
	8 *Body*	*316 SS*
	9 *Seat retainer*	
	10 *Piston*	
	11 *Filter*	
	12 *Piston seal*	*Elastomer to match main regulator*
	13 *Stem seal*	
	14 *EF seal*	
	15 *Body O-ring*	
	16 *Piston guide*	*PTFE*
	17 *Seat*	*PEEK*
	18 *Poppet*	*S17400 SS*
	19 *Body lip seal*	*PTFE & Elgiloy*
	20 *Poppet spring*	*302 SS*
	21 *Poppet damper*	*PTFE*
	22 *Filter carrier*	
	Wetted lubricant	*PTFE-based*

Wetted components listed in *italics*.

E: External Feedback

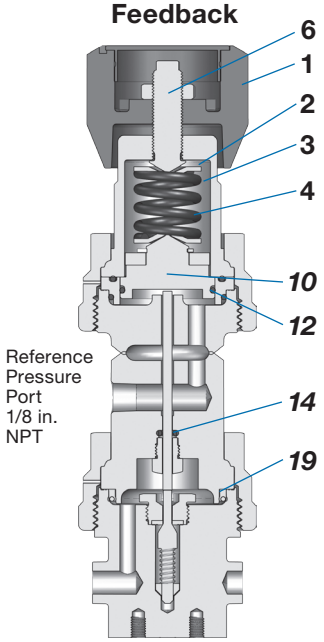

M: Dual Stage

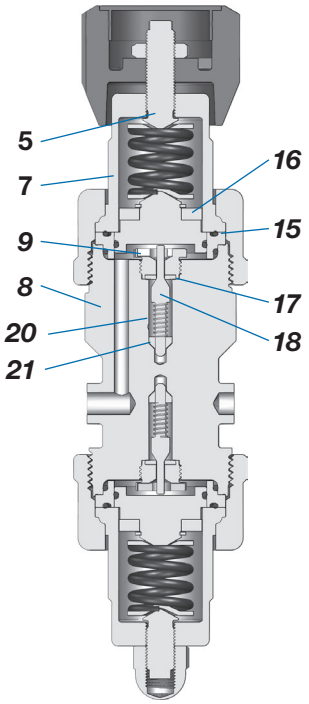

F: Differential Pressure-Reducing

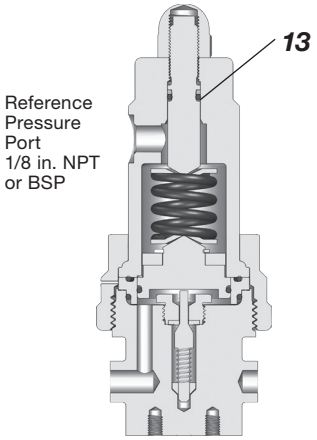

D: Standard Pilot Back-Pressure

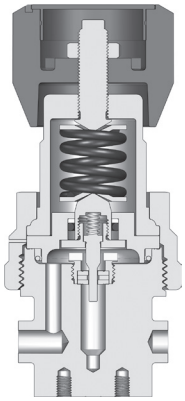

D: Standard Pilot Pressure-Reducing

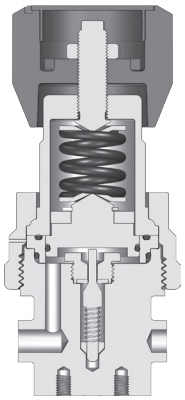

Series and Size Combinations

Note: Not all sensor options can be applied to every series and/or size of regulator. See tables below.

Series Combinations

Designator		SGRS	SHRS	SGRD	SHRD	SGRA	SGBS	SHBS	SGBD	SGBA
A	Non-venting	Y	Y	Y	Y	Y	Y	Y	Y	Y
B	Self-venting	Y				Y				
C	Captured vent	Y				Y				
D	Standard pilot			Y	Y				Y	
E	EF pilot			Y	Y					
F	DP pilot			Y	Y				Y	
K	CV pilot			Y	Y				Y	
M	DS pilot			Y						

Size Combinations

Designator		08	12	16	24
A	Non-venting	Y	Y	Y	Y
B	Self-venting	Y	Y		
C	Captured vent	Y	Y		
D	Standard pilot		Y	Y	Y
E	EF pilot		Y	Y	Y
F	DP pilot		Y	Y	Y
K	CV pilot		Y	Y	Y
M	DS pilot		Y	Y	Y

Handle Options 13

Swagelok process pressure regulators are available with a variety of handle options for spring-loaded and pilot-operated regulators. The handle is used to manually adjust the regulator set pressure. For dome-loaded regulators, the handle options apply to the pilot regulator's handle.

Standard Handle

Designator	Knob Color
B	Blue
K	Black
G	Green
N	Orange
R	Red
Y	Yellow

Handle for No Pilot Regulator

0 = No pilot

Note: This is the only option available for dome-loaded regulators without a pilot regulator.

3 = Antitamper

The spring-loaded regulator antitamper handle has two settings, driven and free spinning. With the knob fully depressed, it will drive the regulator stem, enabling the regulator set pressure to be adjusted. With the knob raised, it will free spin and not drive the stem, preventing set pressure adjustment. Holes drilled in the outer handle allow for use of a padlock.

4 = Antitamper and factory set

Regulators can be factory set at a customer-defined static set pressure (at maximum rated inlet pressure) and locked into antitamper mode.

Additional Options 14

Swagelok process pressure regulators are available with a variety of additional options.

Note: Adding the designator **000** to the end of an ordering number signifies no additional options requested.

Testing and Inspection

Every Swagelok process pressure regulator is factory tested with nitrogen. They are tested for functionality and shell integrity. Shell testing is performed to a requirement of no detectable leakage with a liquid leak detector. Additional product testing and inspection can be requested using the designators below.

For combinations of additional testing and inspection requirements, please contact your local authorized Swagelok sales and service center.

Designator	Testing/Inspection	Description
-MW	Minimum wall certification	Minimum wall thickness measurements are recorded from the regulator body prior to assembly. A test report is available upon request.
W20	1.5x hydro test	The regulator shell① is hydraulically tested to 1.5 × its maximum pressure rating.
PMI	PMI level 1	100% Positive Material Identification test of wetted and pressure-containing metallic components. A test certificate is not supplied.
PM2	PMI level 2 (certified)	100% Positive Material Identification test of wetted and pressure-containing metallic components. A test certificate is supplied.

① Shell excludes pilot regulator and tubing.

Additional Marking

Customer-specific marking can be requested using the following designators. This marking will be in addition to any standard product marking.

Designator	Marking Type	Description
-ID	ID tag with customer marking	Customer-requested text is marked onto a metal ID tag, which is affixed onto the regulator with a wire lanyard.
-LE	Customer marking	Customer-requested text is marked directly onto the regulator body. The text will be positioned on the most accessible surface of the body.

Custom Body Length

If a custom overall length of regulator is required, this can be defined using the following designators. This option is only available for regulators with welded connections, e.g., ASME or DIN flanges.

Designator	Length	Description
L##	Overall length ## (cm)	Custom overall body length where ## is a 2-digit numerical value, e.g., L52. This value must be at least 2 cm and no more than 20 cm longer than the standard body length

Restricted Orifice Installation by Factory

Pressure regulators function as mechanical control and feedback devices, compatible with most systems. If the regulator is found to respond too quickly to outlet changes it may encounter a high level of noise or resonance which can impact performance and life span. If noise or resonance is observed, it is recommended to install an orifice from the KITORIFICE-M5 kit, which includes three M5 orifices (0.5 mm, 1.0 mm, 1.5 mm bores). If installing an orifice plug resolves the issue, regulators can be supplied with the required plug pre-fitted for future orders. Refer to Swagelok *Process Regulators Pressure Reducing 1/2 in. to 1 1/2 in. User Manual,* MS-CRD-0290 for additional information.

Designator	Scope	Description
R05	Pressure reducing regulators	0.5 mm orifice installed in internal feedback hole
R10	Pressure reducing regulators	1.0 mm orifice installed in internal feedback hole
R15	Pressure reducing regulators	1.5 mm orifice installed in internal feedback hole
B05	SGRD, SHRD with pilot regulators.	0.5 mm orifice installed in bleed fitting

General Industrial Pressure-Reducing, Spring-Loaded Regulators — SGRS Series

Applications

Suitable for a wide variety of industrial applications where manual operation of the regulator is suitable.

Features

- Balanced poppet
- Diaphragm or piston-sensing
- Modular design
- Handle actuation

Options

- Non-venting
- Self-venting
- Captured vent
- Antitamper handle
- Factory set and locked handle
- Special cleaning
- NACE MR0175/ISO 15156
- Panel-mounting kits sold separately

Technical Data: PEEK Seat

Body Size	Maximum Inlet Pressure psig (bar)	Maximum Outlet Pressure psig (bar)	Adjustable Pressure Range psig (bar)	Sensing Type psig (bar)	Temperature Range °F (°C)	Flow Coefficient (C_V)	Minimum Weight lb (kg)
08	6000 (413)	6000 (413)	5 to 6000 (0.3 to 413)	Diaphragm: 5 to 375 (0.3 to 25.8) Piston: 375 to 6000 (25.8 to 413)	–40 to 356° (–40 to 180°) See **Pressure-Temperature Ratings**, page 14	1.95	11.2 (5.2)
12						2.30	12.5 (5.6)
16			5 to 3600 (0.3 to 248)	Diaphragm: 5 to 100 (0.3 to 6.8) Piston: 100 to 3600 (6.8 to 248)		4.80	27.3 (12.4)
24						10.70	28.7 (13.0)

Technical Data: Elastomer Seat

Body Size	Maximum Inlet Pressure psig (bar)	Maximum Outlet Pressure psig (bar)	Adjustable Pressure Range psig (bar)	Sensing Type psig (bar)	Temperature Range °F (°C)	Flow Coefficient (C_V)	Minimum Weight lb (kg)
08	1000 (68.9)	1000 (68.9)	5 to 1000 (0.3 to 68.9)	Diaphragm: 5 to 375 (0.3 to 25.8) Piston: 375 to 1000 (25.8 to 68.9)	–49 to 356° (–45 to 180°) See **Pressure-Temperature Ratings**, page 14	1.95	11.2 (5.2)
12						2.30	12.5 (5.6)
16			5 to 1000 (0.3 to 68.9)	Diaphragm: 5 to 250 (0.3 to 17.2) Piston: 250 to 1000 (17.2 to 68.9)		4.80	27.3 (12.4)
24						10.70	28.7 (13.0)

Materials of Construction

Component		Material / Specification
Common Components	**1** Spring housing	316L SS / A479
	2 Slot cover	Nylon
	3 Stem	316L SS / A479
	4 Upper spring button	
	5 Set spring	51CrV4 / EN 10089 or ASTM A401
	6 Cap screw	304 SS / A193
	7 Lower spring button	316L SS / A479
	8 *Body*	
	9 *Body insert*	
	10 *Body insert retainer*	
	11 *Poppet*	
	12 *Seat*	*316L SS / A479 or PEEK*
	13 *Poppet spring*	*Elgiloy*
	14 *O-rings*	*EPDM, FKM, or nitrile*
	15 *Backup rings*	*PTFE*
	16 *Circlip*	*316 SS*
	17 *Body plug*	316L SS / A479
Actuation	**18** Knob	Nylon
	19 Knob cover	Plastic
	20 Disc spring	316 SS
	21 Washer	
	22 Circlip	
	23 Screw	304 SS / A193
	24 A/T upper	316L SS / A479
	25 A/T inner	
	26 A/T outer	
Sensing Mechanism	**Diaphragm Only**	
	27 *Diaphragm nut*	*304 SS / A193*
	28 *Diaphragm*	*EPDM, FKM, or nitrile*
	29 *Upper diaphragm plate*	*316L SS / A479*
	30 *Lower diaphragm plate*	
	31 *Diaphragm screw*	
	Piston Only	
	32 *Piston*	*316L SS / A479*
	33 *Piston plate*	
Options	***34*** *Vent plate*	

Nonwetted lubricant: hydrocarbon-based.
Wetted lubricant: PTFE-based.
Wetted components listed in *italics*.

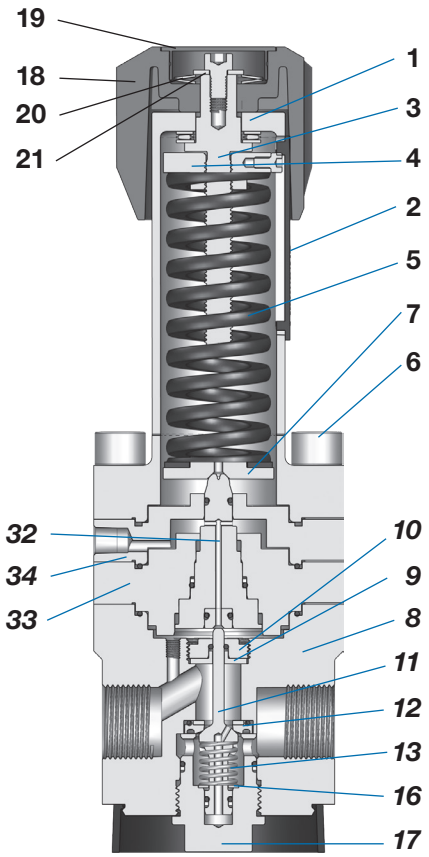

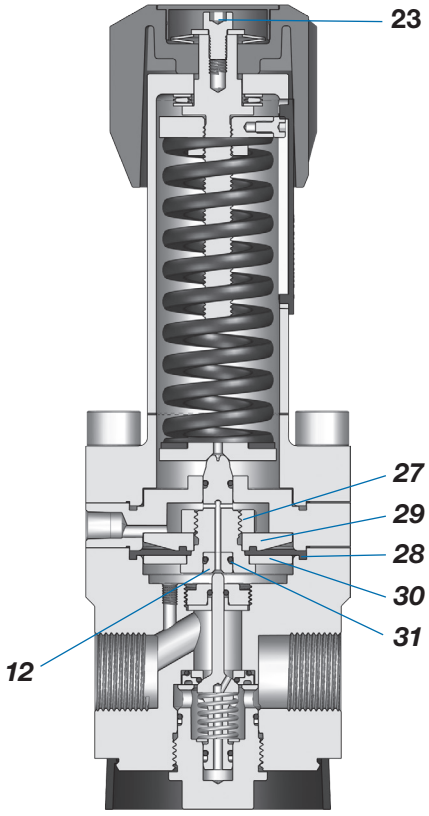

Flow Curves — SGRS Series

The graphs illustrate the change or "droop" in outlet pressures as the flow rate increases. For more flow curve information, contact your authorized Swagelok sales and service center or visit swagelok.com to generate your own flow curves.

SGRS12

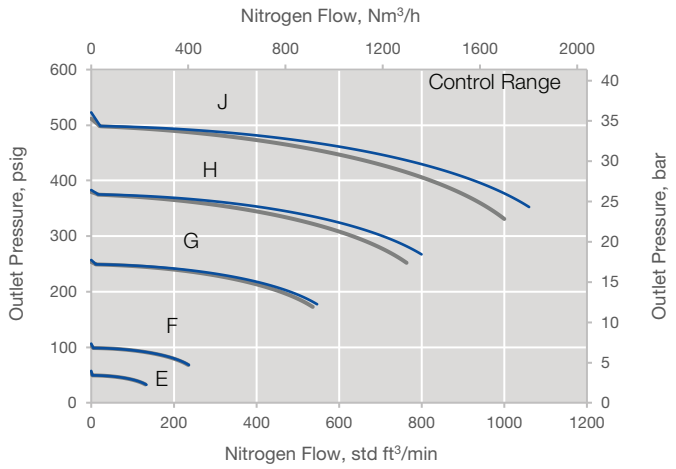

1000 psig (68.9 bar) inlet, elastomer seat

3000 psig (206 bar) inlet, PEEK seat

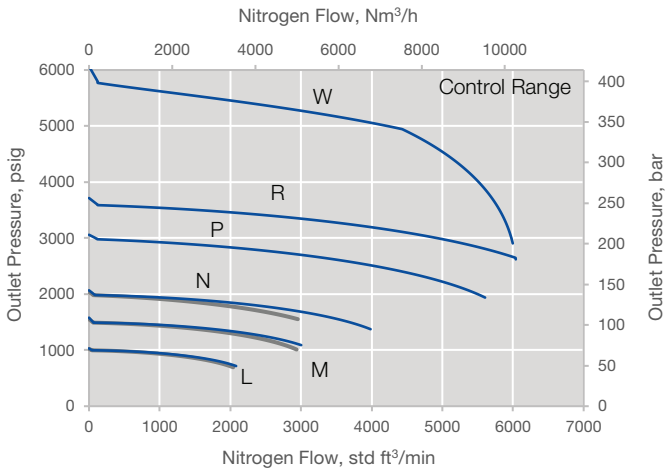

3000 psig (206 bar) inlet, PEEK seat

6000 psig (413 bar) inlet, PEEK seat

SGRS16

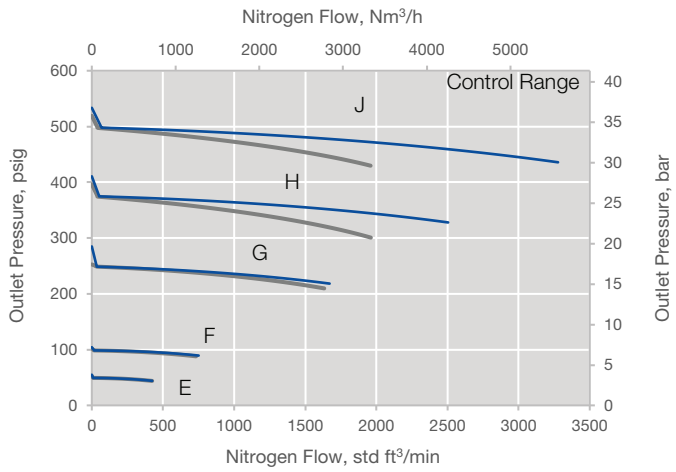

1000 psig (68.9 bar) inlet, elastomer seat

3000 psig (206 bar) inlet, PEEK seat

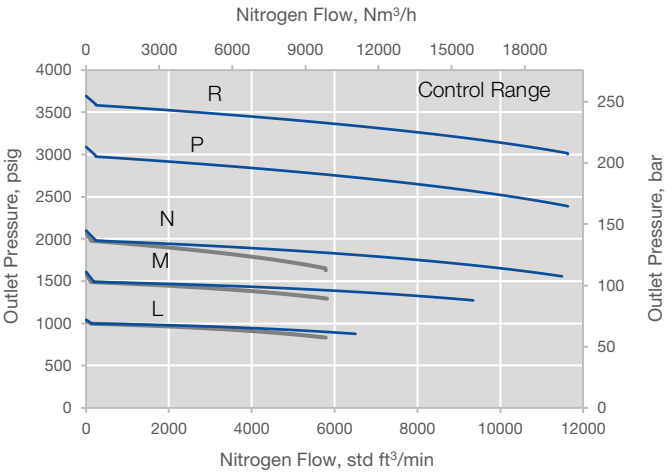

3000 psig (206 bar) inlet, PEEK seat

6000 psig (413 bar) inlet, PEEK seat

Flow Curves — SGRS Series

The graphs illustrate the change or “droop” in outlet pressures as the flow rate increases. For more flow curve information, contact your authorized Swagelok sales and service center or visit swagelok.com to generate your own flow curves.

SGRS24

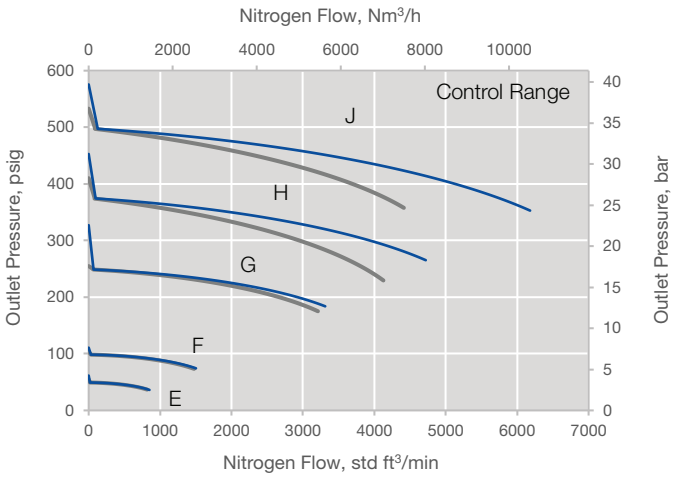

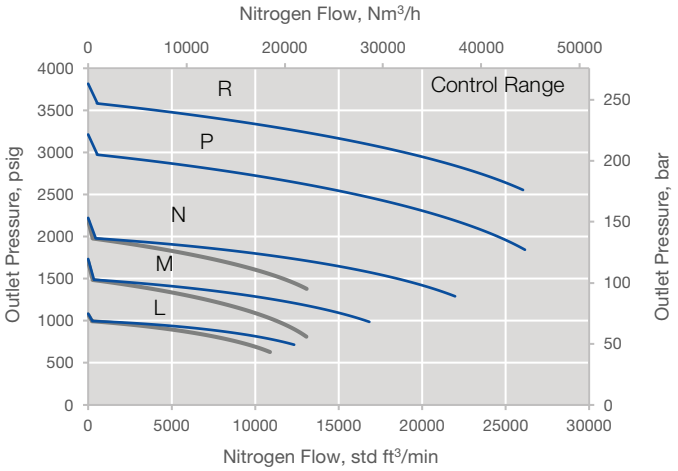

1000 psig (68.9 bar) inlet, elastomer seat
3000 psig (206 bar) inlet, PEEK seat

3000 psig (206 bar) inlet, PEEK seat
6000 psig (413 bar) inlet, PEEK seat

SGRS Dimensions

Dimensions, in inches (millimeters), are for reference only and are subject to change. Dimensions based on a threaded connection. See cad.swagelok.com for detailed CAD information of your product.

Body Size	**Dimensions**, in. (mm)					
	A	**B**	**C**	**D**	**E**	**F**
08	10.0 (254)①	2.91 (74)	3.12 (80)	1.81 (46)	3.74 (95)	1.50 (38)
12	10.0 (254)①	3.23 (82)	3.70 (94)	1.81 (46)	3.74 (95)	1.50 (38)
16	11.0 (280)②	4.53 (115)	4.33 (110)	2.05 (52)	N/A	1.77 (45)
24	11.6 (295)②	4.53 (115)	4.33 (110)	2.32 (59)	N/A	2.36 (60)

① Based on a diaphragm sensing unit, dimension will increase by 15 mm for piston sensing and a further 15 mm for captured or self-vent options.

② Based on a diaphragm sensing unit, dimension will increase by 20 mm for piston sensing.

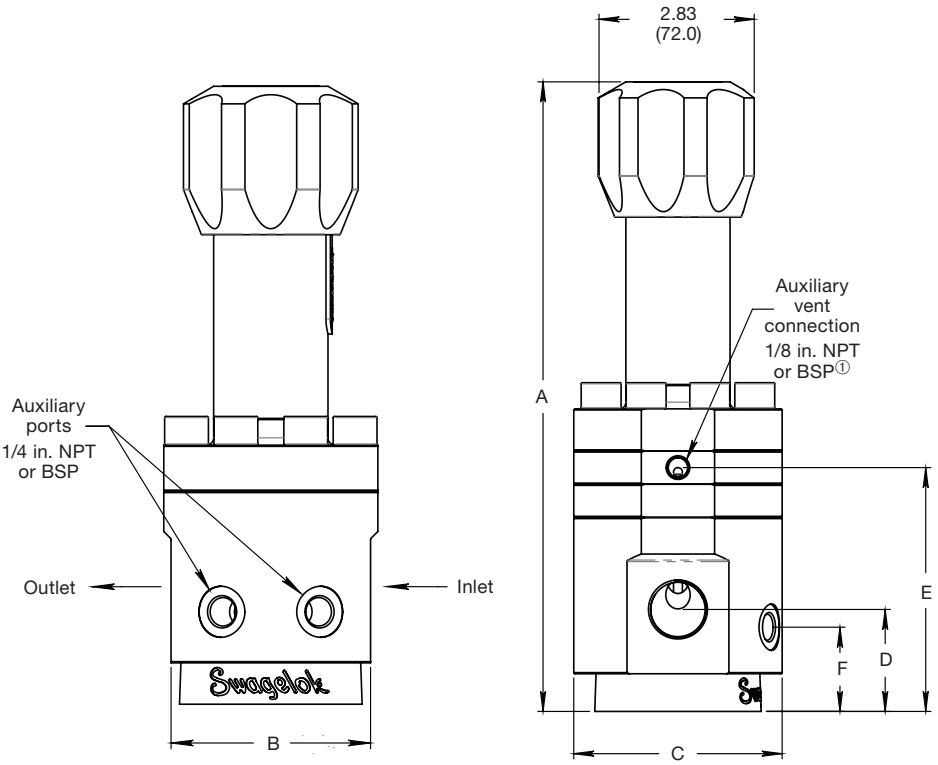

① For flange-style regulators, the vent port will be positioned 90° anti-clockwise (when viewed from the top of the regulator) to ensure adequate clearance from the flanges. When a BSP auxiliary port is connected in combination, the use of a Swagelok RSNB gasket is recommended.

SGRS Supply Pressure Effect

Body Size	**Control Range**					
	E-G	**H**	**J-L**	**M-P**	**R**	**W**
08	0.62%	0.62%	1.98%	5.36%	9.16%	9.16%
12	0.62%	0.62%	1.98%	5.36%	9.16%	9.16%
16	0.68%	3.45%	3.45%	9.35%	9.35%	–
24	1.44%	7.31%	7.31%	19.84%	19.84%	–

Ordering Information

Build an SGRS series regulator ordering number by combining the designators in the sequence shown below.

Note: Not all options are available for every size of regulator. For more information on the options for each regulator size, see pages 5 to 21.

1	2	3	4	5	6	7	8	9	10	11	12	13	14
SG	R	S	12	1	F	E	N0	A	0	V	A	R	000

1 Type of Regulator
SG = Swagelok general industrial

2 Regulator Function
R = Pressure reducing

3 Loading Mechanism
S = Spring

4 Body Size
08 = 1/2 in./DN15
12 = 3/4 in./DN20
16 = 1 in./DN25
24 = 1 1/2 in./DN40

5 Body Material
1 = 316L
C = 316L, SC-11 cleaned

6 Control Range
E = 5 to 50 psig (0.3 to 3.4 bar)
F = 10 to 100 psig (0.7 to 6.8 bar)
G = 25 to 250 psig (1.7 to 17.2 bar)
H = 37 to 375 psig (2.6 to 25.8 bar)
J = 50 to 500 psig (3.4 to 34.4 bar)
L = 100 to 1000 psig (6.9 to 68.9 bar)
M = 150 to 1500 psig (10.3 to 103 bar)
N = 200 to 2000 psig (13.7 to 137 bar)
P = 300 to 3000 psig (20.6 to 206 bar)
R = 360 to 3600 psig (24.8 to 248 bar)
W = 600 to 6000 psig (41.3 to 413 bar)①

① Only available on body sizes 08 and 12.

7 Seat Material
E = Elastomer seat①②
P = PEEK seat

① Not available on control ranges M, N, P, R, or W.
② Maximum inlet pressure 1000 psig (68.9 bar).

8 Connection Type
N0 = NPT female
B0 = BSP (ISO 228) female
FA = ASME RF flange, class 150
FB = ASME RF flange, class 300
FC = ASME RF flange, class 600
FE = ASME RF flange, class 1500
FF = ASME RF flange, class 2500
GB = ASME RTJ flange, class 300
GC = ASME RTJ flange, class 600
GE = ASME RTJ flange, class 1500
GF = ASME RTJ flange, class 2500
DN = EN1092-1 RF flange, PN40

Note: Flanges are not available on body size 08 and have control range limitations. Additional connection options are available, see page 11 for details.

9 Port Configuration
A = See page 12
B = See page 12①
C = See page 12①
F = See page 12①
M = See page 12

① Only available on body sizes 08 and 12.

10 Auxiliary Port Connection
0 = No auxiliary ports①②
N = Female NPT pipe threads②③
B = Female ISO/BSP parallel threads

① Only available on port configuration A.
② Only available on body sizes 08 and 12.
③ Only available on connection type N0 and N4.

11 Seal Material
V = FKM
N = Nitrile
E = EPDM
L = Low-temperature nitrile

12 Sensor Options
A = Non-venting
B = Self-venting①②
C = Captured vent①②

① Only available on body sizes 08 and 12.
② Not available on auxiliary port connection 0.

13 Handle Options
B = Knob (blue)
K = Knob (black)
G = Knob (green)
N = Knob (orange)
Y = Knob (yellow)
R = Knob (red)
3 = Antitamper
4 = Antitamper and factory set

14 Additional Options
000 = None

See page 21 for options.

High Sensitivity,Pressure-Reducing, Spring-Loaded Regulators — SHRS Series

Applications

Suitable for a wide variety of industrial applications where manual operation of the regulator is suitable and accurate set pressure control is desired.

Features

- Balanced poppet
- Diaphragm sensing
- Handle actuation
- Non-venting

Options

- Antitamper handle
- Factory set and locked handle
- Special cleaning
- NACE MR0175/ISO 15156
- Panel-mounting kits sold separately

Technical Data: Elastomer Seat

Body Size	**Maximum Inlet Pressure** psig (bar)	**Maximum Outlet Pressure** psig (bar)	**Adjustable Pressure Range** psig (bar)	**Sensing Type** psig (bar)	**Temperature Range** °F (°C)	**Flow Coefficient** (C_V)	**Minimum Weight** lb (kg)
08	250 (17.2)	250 (17.2)	1 to 50 (0.07 to 3.4)	Diaphragm: 0 to 50 (0 to 3.4)	–49 to 356° (–45 to 180°) See **Pressure-Temperature Ratings**, page 14	1.95	16.5 (7.5)
12						2.3	17.6 (8.0)
16						4.8	26.5 (12.0)
24						10.7	30.4 (13.8)

Materials of Construction

Component		Material / Specification
Common Components	**1** Spring housing	316L SS / A479
	2 Slot cover	Nylon
	3 Stem	316L SS / A479
	4 Upper spring button	
	5 Set spring	51CrV4 / EN 10089 or ASTM A401
	6 Cap screw	304 SS / A193
	7 Lower spring button	316L SS / A479
	8 *Body*	
	9 *Body insert*	
	10 *Body insert retainer*	
	11 *Poppet*	
	12 *Seat*	*316L SS / A479*
	13 *Poppet spring*	*Elgiloy*
	14 *O-rings*	*EPDM, FKM, or nitrile*
	15 *Backup rings*	*PTFE*
	16 *Circlip*	*316 SS*
	17 *Body plug*	316L SS / A479
Actuation	**18** Knob	Nylon
	19 Knob cover	Plastic
	20 Disc spring	316 SS
	21 Washer	
	22 Circlip	
	23 Screw	304 SS / A193
	24 A/T upper	316L SS / A479
	25 A/T inner	
	26 A/T outer	
Sensing Mechanism	**Diaphragm Only**	
	27 Diaphragm nut	304 SS / A193
	28 *Diaphragm*	*EPDM, FKM, or nitrile*
	29 Upper diaphragm plate	316L SS / A479
	30 *Lower diaphragm plate*	*316L SS / A479*
	31 *Diaphragm screw*	

Nonwetted lubricant: hydrocarbon-based.

Wetted lubricant: PTFE-based.

Wetted components listed in *italics*.

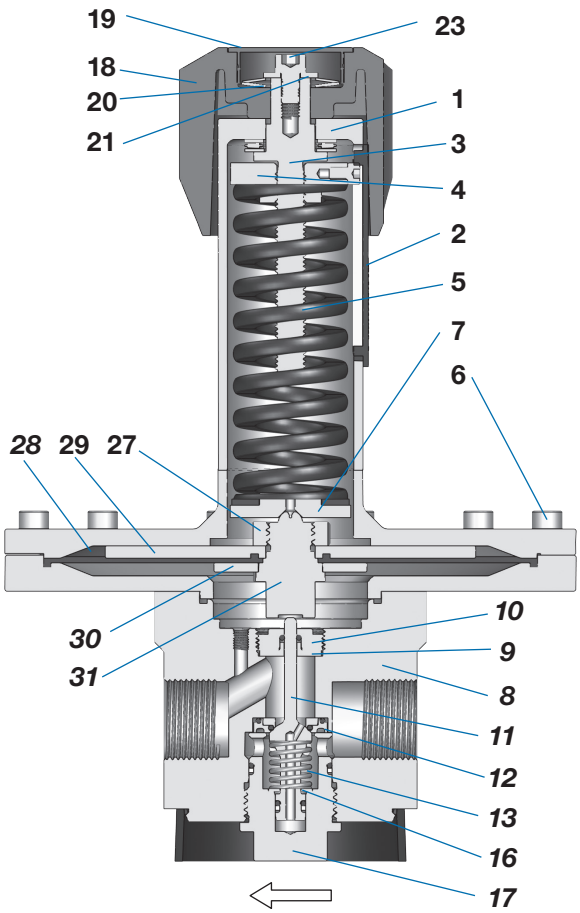

Flow Curves — SHRS Series

The graphs below illustrate the change or “droop” in outlet pressures as the flow rate increases. For more flow curve information, contact your authorized Swagelok sales and service center or visit swagelok.com to generate your own flow curves.

SHRS12

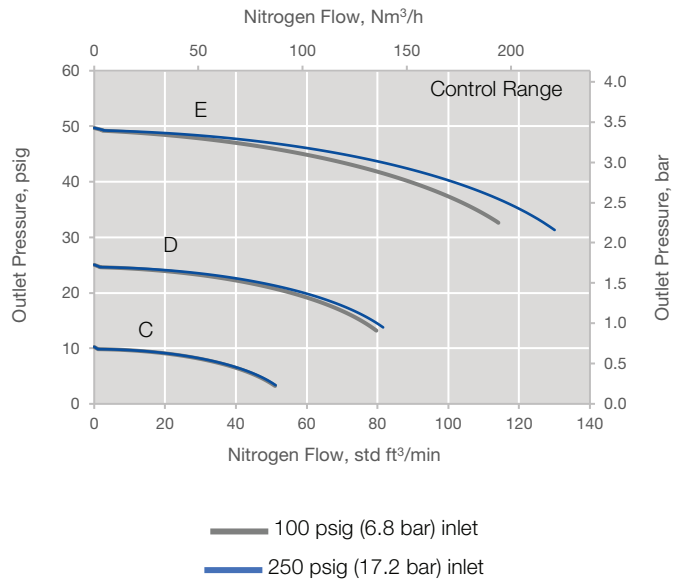

SHRS16

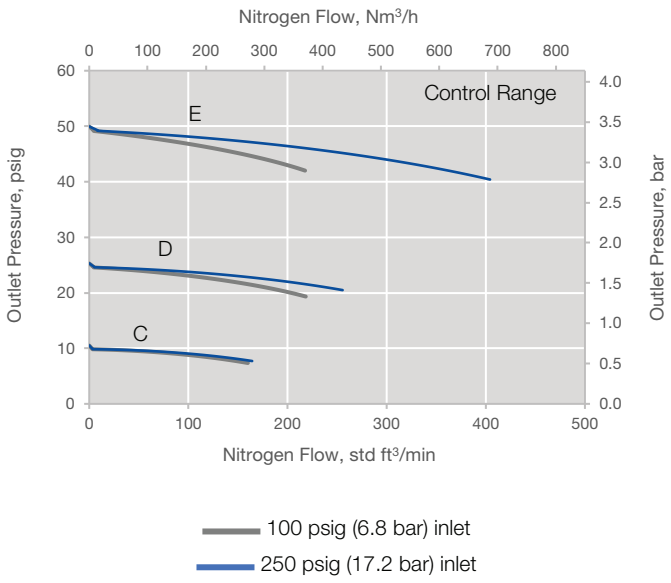

SHRS24

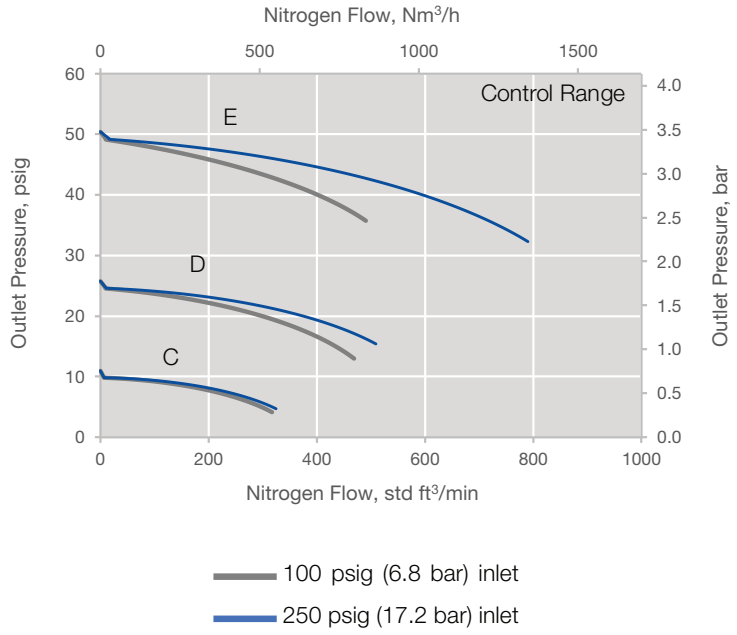

SHRS Dimensions

Dimensions, in inches (millimeters), are for reference only and are subject to change. Dimensions based on a threaded connection. See cad.swagelok.com for detailed CAD information of your product.

Body Size	Dimensions, in. (mm)				
	A	B	C	D	F
08	10.4 (264)	2.91 (74)	3.12 (80)	1.81 (46)	1.50 (38)
12	10.4 (264)	3.23 (82)	3.70 (94)	1.81 (46)	1.50 (38)
16	11.6 (293)	4.53 (115)	4.33 (110)	2.05 (52)	1.77 (45)
24	12.1 (308)	4.53 (115)	4.33 (110)	2.32 (59)	2.36 (60)

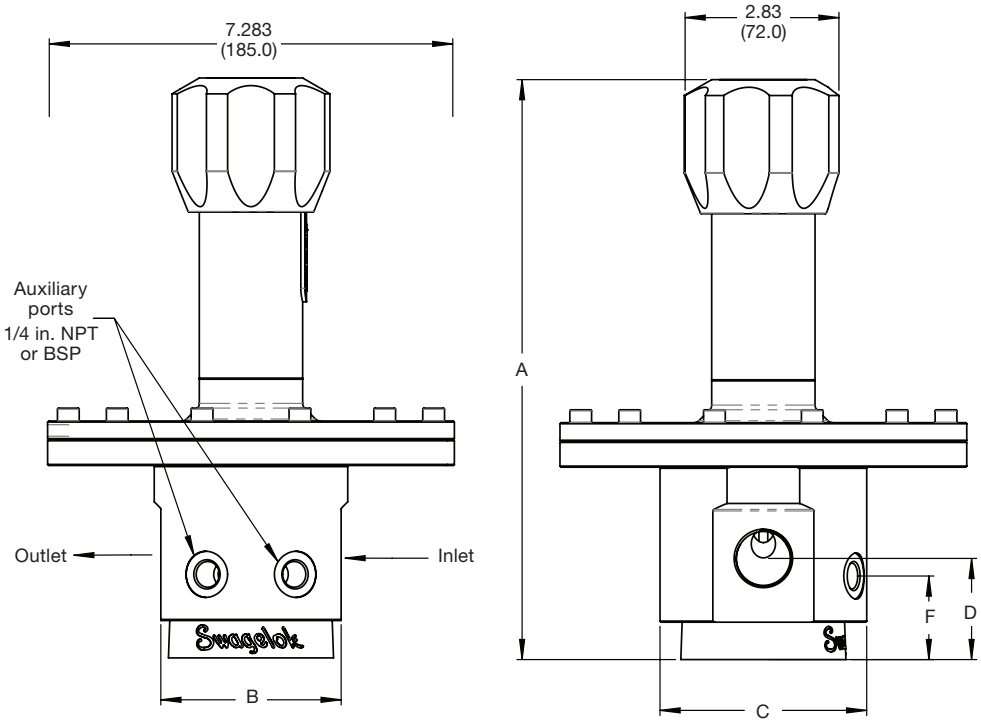

SHRS Supply Pressure Effect

Body Size	Supply Pressure Effect
08	0.07%
12	0.07%
16	0.12%
24	0.26%

Ordering Information

Build an SHRS series regulator ordering number by combining the designators in the sequence shown below.

Note: Not all options are available for every size of regulator. For more information on the options for each regulator size, see pages 5 to 21.

1	2	3	4	5	6	7	8	9	10	11	12	13	14
SH	R	S	12	1	D	E	B0	F	B	N	A	R	000

1 Type of Regulator
SH = Swagelok high sensitivity

2 Regulator Function
R = Pressure-reducing

3 Loading Mechanism
S = Spring

4 Body Size
08 = 1/2 in./DN15
12 = 3/4 in./DN20
16 = 1 in./DN25
24 = 1 1/2 in./DN40

5 Body Material
1 = 316L
C = 316L, SC-11 cleaned

6 Control Range
C = 1 to 10 psig (0.07 to 0.68 bar)
D = 2.5 to 25 psig (0.2 to 1.7 bar)
E = 5 to 50 psig (0.3 to 3.4 bar)

7 Seat Material
E = Elastomer seat, 250 psig (17.2 bar)

8 Connection Type
N0 = NPT female, size matches body
B0 = BSP (ISO 228) female, size matches body
FA = ASME RF flange, class 150
DN = EN1092-1 RF flange, PN40

Note: Flanges are not available on body size 08 and have control range limitations. Additional connection options are available, see page 11 for details.

9 Port Configuration
A = See page 12
B = See page 12①
C = See page 12①
F = See page 12①
M = See page 12

① Only available on body sizes 08 and 12.

10 Auxiliary Port Connection
0 = No auxiliary ports①②
N = Female NPT pipe threads②③
B = Female ISO/BSP parallel threads

① Only available on port configuration A.
② Only available on body sizes 08 and 12
③ Only available on connection type N0 and N4

11 Seal Material
V = FKM
N = Nitrile
E = EPDM
L = Low-temperature nitrile

12 Sensor Options
A = Non-venting

13 Handle Options
B = Knob (blue)
K = Knob (black)
G = Knob (green)
N = Knob (orange)
Y = Knob (yellow)
R = Knob (red)
3 = Antitamper
4 = Antitamper and factory set

14 Additional Options
000 = None
See page 21 for options.

High Pressure-Reducing, Spring-loaded Regulators - SFRS Series

Applications

Suitable for a wide variety of industrial applications where manual operation of the regulator is suitable.

Features

- Balanced poppet
- Piston-sensing
- Modular design
- Handle actuation
- Body material construction 316SS >12% Ni
- Patented removable cartridge design allows servicing without the need to remove the product from the dispenser system

Options

- Antitamper handle
- Factory set and locked handle
- Special cleaning

Technical Data

Body Size	Maximum Inlet Pressure psig (bar)	Maximum Outlet Pressure psig (bar)	Adjustable Pressure Range psig (bar)	Sensing Type	Temperature Range °F (°C)	Flow Coefficient (C_V)	Minimum Weight lb (kg)
09	15 228 (1 050)	15 228 (1 050)	1 269 to 12 690 (87.5 to 875)	Piston	–40 to 185 (–40 to 85)	1.95	33 (15)

Materials of Construction

	Component	Material / Specification
1	Spring housing	316L SS / A479
2	Slot cover	Nylon
3	Stem	316L SS / A479
4	Upper spring button	
5	Set spring	51CrV4 / EN 10089 or ASTM A401
6	Cap screw	304 SS / A193
7	Lower spring button	316L SS / A479
8	*Body*	*316L SS / A479*
9	*Piston*	
10	*Piston Retainer*	
11	*Body plug*	
12	Body plug flange	316L SS / A479
13	*Seat Support*	*316L SS / A479*
14	*Seat*	*PEEK*
15	*Poppet*	*316L SS / A479*
16	*Poppet Spring*	*Elgiloy*
17	*Circlip*	*316 SS*
18	*O-rings*	*FKM*
19	*Backup Rings*	*PTFE / Nylon*

Nonwetted lubricant: hydrocarbon-based.

Wetted lubricant: PTFE-based.

Wetted components listed in *italics*.

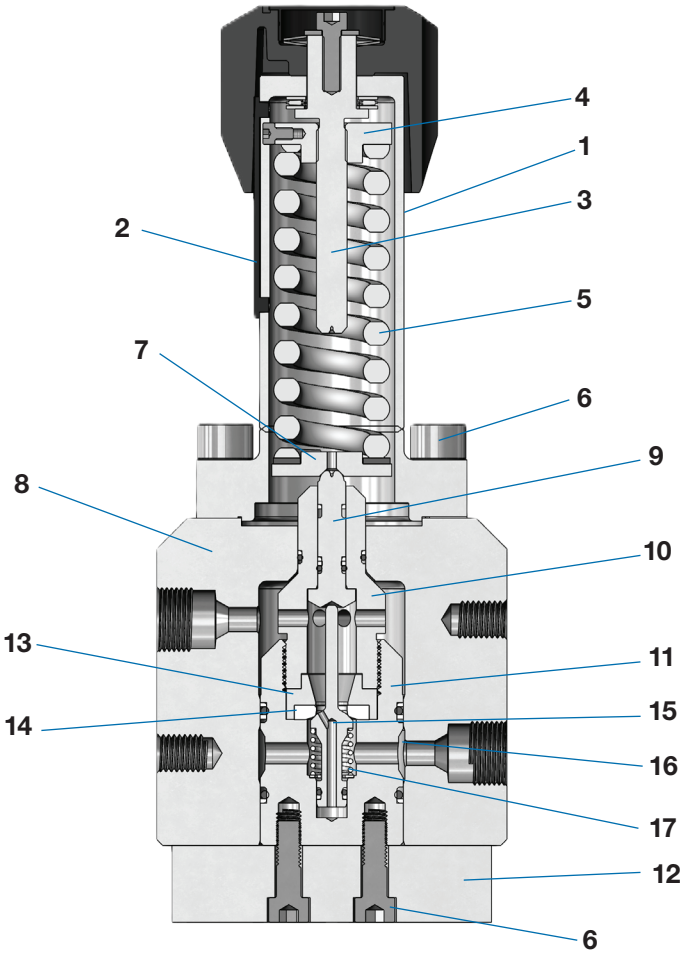

Flow Curves — SFRS Series

The graphs below illustrate the change or “droop” in outlet pressures as the flow rate increases. For more flow curve information, contact your authorized Swagelok sales and service center or visit swagelok.com to generate your own flow curves.

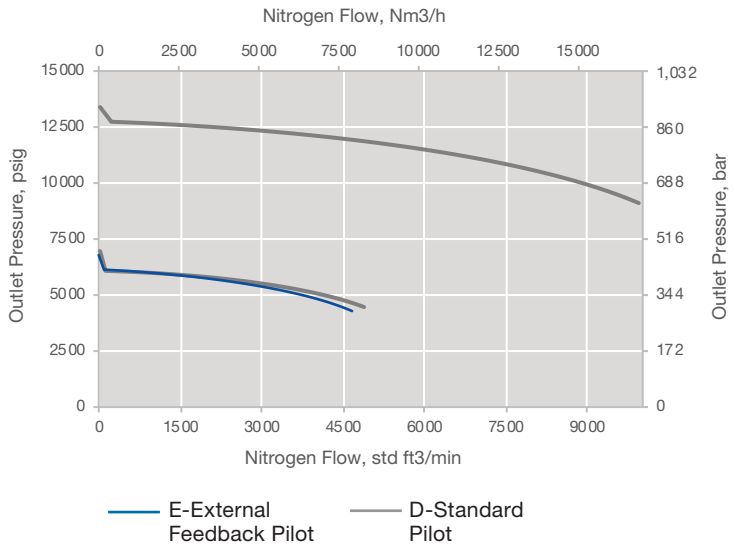

Dimensions — SFRS Series

Dimensions, in inches (millimetres), are for reference only and are subject to change. Dimensions based on a threaded connection. See cad.swagelok.com for detailed CAD information of your product.

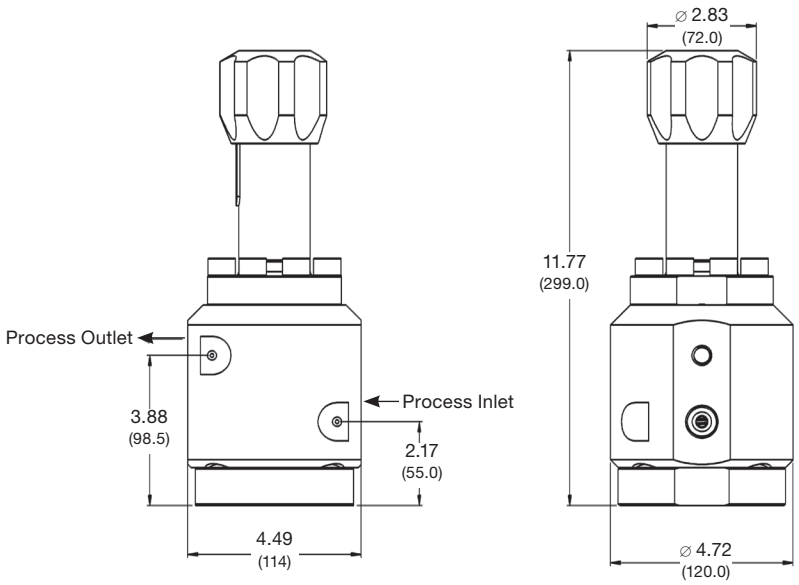

SFRS Supply Pressure Effect

Body Size	Supply Pressure Effect
09	18.30%

Ordering Information

Build an SFRS series regulator ordering number by combining the designators in the sequence shown below.

1	2	3	4	5	6	7	8	9	10	11	12	13	14
SF	R	S	09	1	Y	P	K2	A	B	T	A	B	000

1 Type of Regulator
SF = Swagelok high pressure

2 Regulator Function
R = Pressure-reducing

3 Loading Mechanism
S = Spring

4 Body Size
09 = 9/16 in.

5 Body Material
1 = 316L
C = 316L, SC-11 cleaned

6 Control Range
Y = 1 269 to 12 690 psig (87.5 to 875 bar)

7 Seat Material
P = PEEK seat

8 Connection Type
K2 = 1/2 in. FK (8FK)
V0 = 9/16 in. IPT (9MF)

9 Port Configuration
A = One inlet port, one outlet port, no gauge ports

10 Auxiliary Port Connection
B = Female ISO/BSP parallel threads

11 Seal Material
T = Low temperature EPDM

12 Sensor Options
A = Non-venting

13 Handle Options
B = Knob (blue)
K = Knob (black)
G = Knob (green)
N = Knob (orange)
Y = Knob (yellow)
R = Knob (red)
3 = Antitamper
4 = Antitamper and factory set

14 Additional Options
000 = None

General Industrial Pressure-Reducing, Dome-Loaded Regulators — SGRD Series

Applications

Suitable for a wide variety of industrial applications where manual or remote operation of the regulator is suitable.

Features

- Balanced poppet
- Diaphragm sensing
- Non-venting
- Pilot regulator control

Options

- External feedback to pilot
- Differential pressure pilot
- Dual stage pilot
- Antitamper pilot handle
- Factory set pilot handle
- Special cleaning
- NACE MR0175/ISO 15156

Technical Data: PEEK Seat

Body Size	Maximum Inlet Pressure psig (bar)	Maximum Outlet Pressure psig (bar)	Adjustable Pressure Range psig (bar)	Sensing Type psig (bar)	Temperature Range °F (°C)	Flow Coefficient (C_v)	Minimum Weight lb (kg)
12	6000 (413)	6000 (413)	5 to 6000 (0.3 to 413)	Diaphragm: 5 to 6000 (0.3 to 413)	–40 to 356° (–40 to 180°) See **Pressure-Temperature Ratings**, page 14	2.3	9.7 (4.4)
16						4.8	26.5 (12.0)
24						10.7	27.6 (12.5)

Technical Data: Elastomer Seat

Body Size	Maximum Inlet Pressure psig (bar)	Maximum Outlet Pressure psig (bar)	Adjustable Pressure Range psig (bar)	Sensing Type psig (bar)	Temperature Range °F (°C)	Flow Coefficient (C_v)	Minimum Weight lb (kg)
12	1000 (68.9)	1000 (68.9)	5 to 1000 (0.3 to 68.9)	Diaphragm: 5 to 1000 (0.3 to 68.9)	–49 to 356° (–45 to 180°) See **Pressure-Temperature Ratings**, page 14	2.3	9.7 (4.4)
16						4.8	26.5 (12.0)
24						10.7	27.6 (12.5)

Materials of Construction

Component		Material / Specification
Common Components	***1*** *Dome*	*316L SS / A479*
	2 Cap screw	304 SS / A193
	3 *Body*	*316L SS / A479*
	4 *Body insert*	
	5 *Body insert retainer*	
	6 *Poppet*	
	7 *Seat*	*316L SS / A479 or PEEK*
	8 *Poppet spring*	*Elgiloy*
	9 *O-rings*	*EPDM, FKM, or nitrile*
	10 *Backup rings*	*PTFE*
	11 *Circlip*	*316 SS*
	12 *Body plug*	*316L SS / A479*
Sensing Mechanism	**Diaphragm Only**	
	13 *Diaphragm nut*	*304 SS / A193*
	14 *Diaphragm*	*EPDM, FKM, or nitrile*
	15 *Upper diaphragm plate*	*316L SS / A479*
	16 *Lower diaphragm plate*	
	17 *Diaphragm screw*	

Nonwetted lubricant: hydrocarbon-based.

Wetted lubricant: PTFE-based.

Wetted components listed in *italics.*

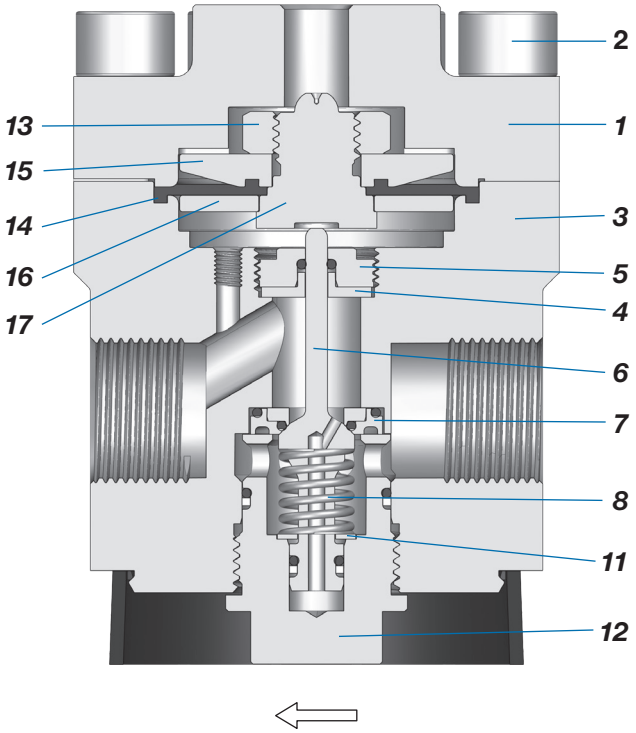

Flow Curves — SGRD Series

The graphs below illustrate the change or “droop” in outlet pressures as the flow rate increases. For more flow curve information, contact your authorized Swagelok sales and service center or visit swagelok.com to generate your own flow curves.

Note: Elastomer and PEEK curves are very similar and may be plotted over each other.

SGRD12

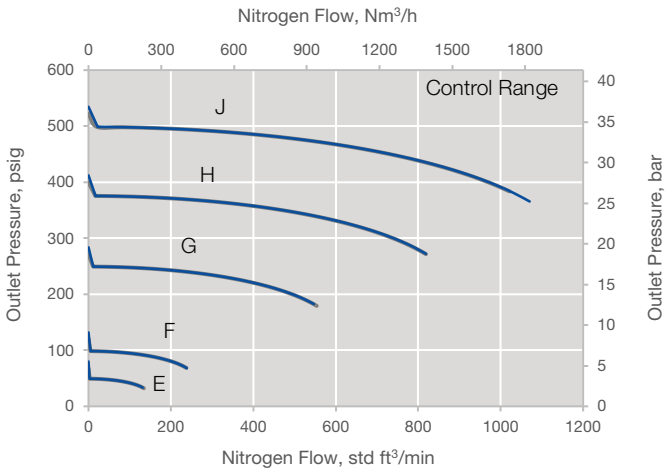

1000 psig (68.9 bar) inlet, elastomer seat, Standard Pilot

3000 psig (206 bar) inlet, PEEK seat, Standard Pilot

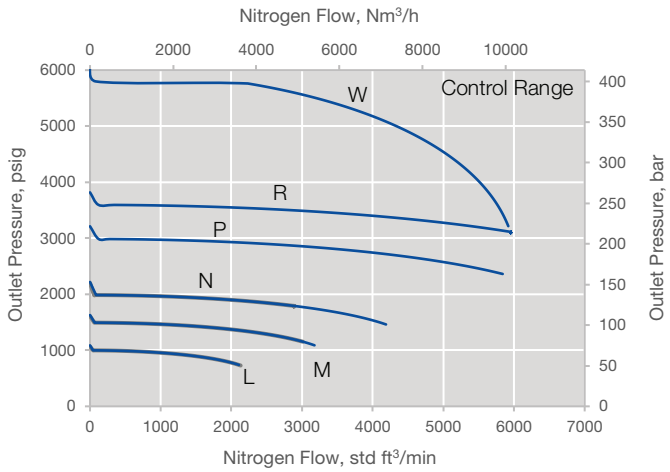

3000 psig (206 bar) inlet, PEEK seat, Standard Pilot

6000 psig (413 bar) inlet, PEEK seat, Standard Pilot

SGRD16

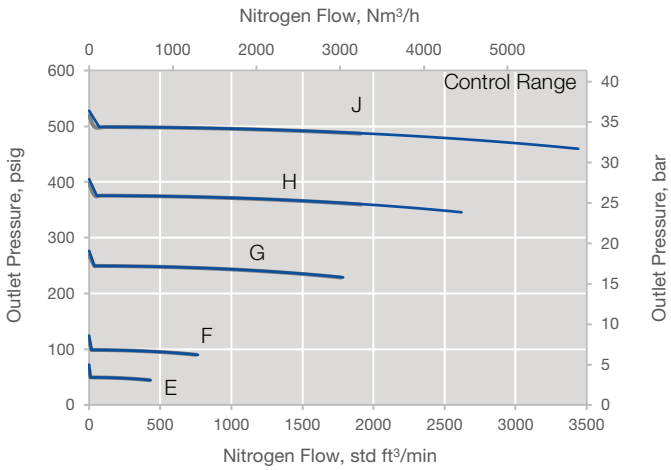

1000 psig (68.9 bar) inlet, elastomer seat, Standard Pilot

3000 psig (206 bar) inlet, PEEK seat, Standard Pilot

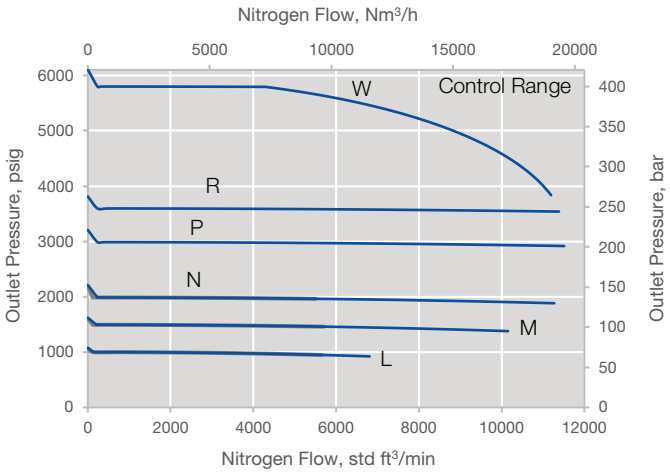

3000 psig (206 bar) inlet, PEEK seat, Standard Pilot

6000 psig (413 bar) inlet, PEEK seat, Standard Pilot

Flow Curves — SGRD Series

The graphs below illustrate the change or “droop” in outlet pressures as the flow rate increases. For more flow curve information, contact your authorized Swagelok sales and service center or visit swagelok.com to generate your own flow curves.

SGRD24

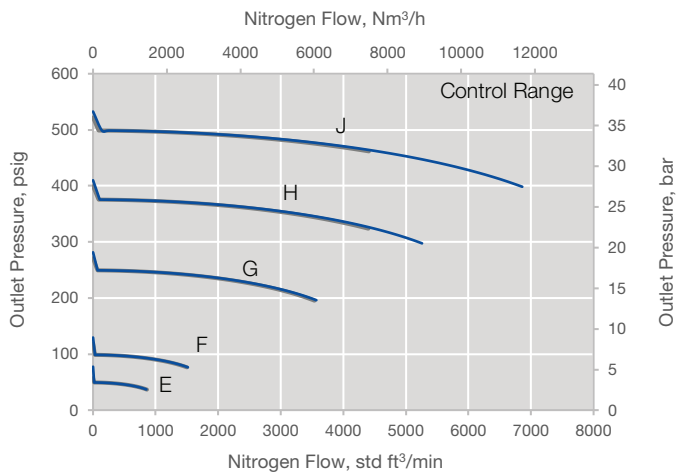

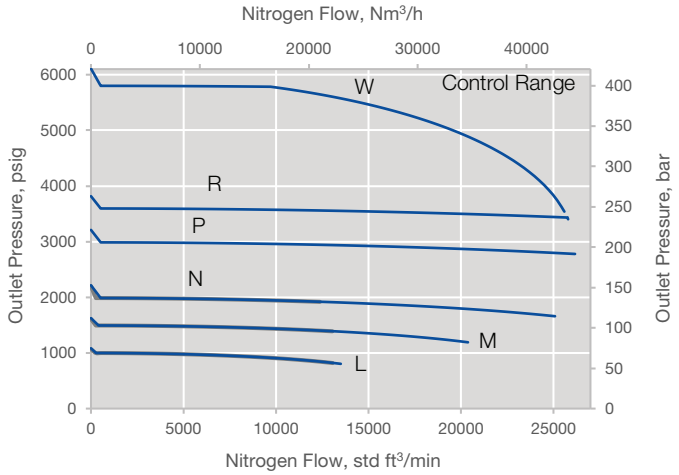

1000 psig (68.9 bar) inlet, elastomer seat, Standard Pilot

3000 psig (206 bar) inlet, PEEK seat, Standard Pilot

3000 psig (206 bar) inlet, PEEK seat, Standard Pilot

6000 psig (413 bar) inlet, PEEK seat, Standard Pilot

SGRD Dimensions

Dimensions, in inches (millimeters), are for reference only and are subject to change. Dimensions based on a threaded connection. See cad.swagelok.com for detailed CAD information of your product.

Body Size	Dimensions, in. (mm)				
	A	B	C	D	F
12	4.70 (120)	3.23 (82)	3.70 (94)	1.81 (46)	1.50 (38)
16	6.06 (154)	4.53 (115)	4.33 (110)	2.05 (52)	1.77 (45)
24	6.65 (169)	4.53 (115)	4.33 (110)	2.32 (59)	2.36 (60)

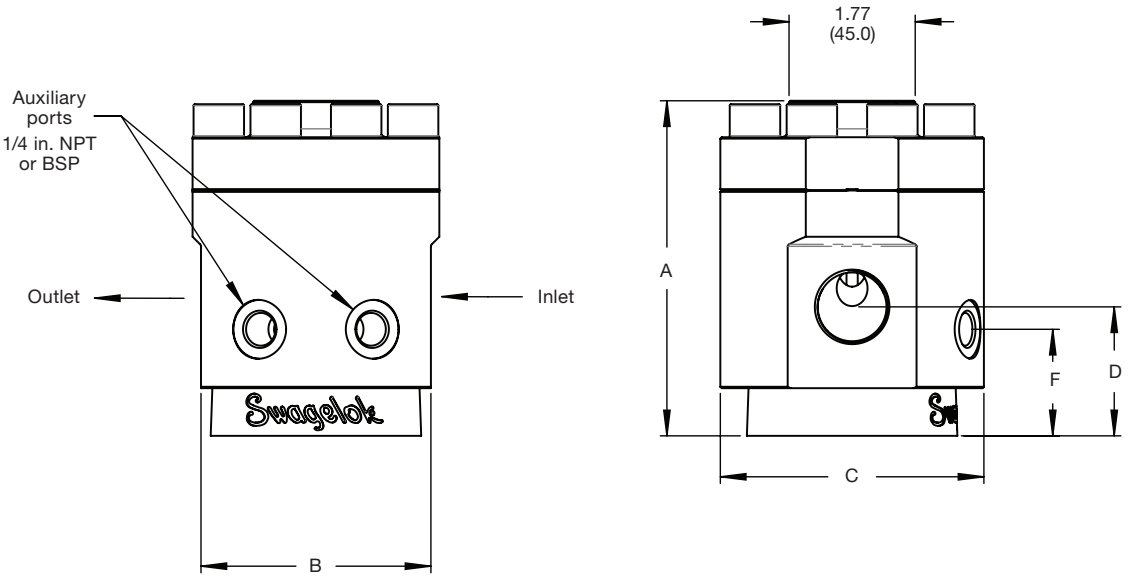

SGRD Supply Pressure Effect

Sensor Option	Body Size	Control Range			
		0	E-J	L-R	W
A-No Pilot	12	0.62%	–	–	–
	16	0.68%	–	–	–
	24	1.44%	–	–	–
D-Standard, **E**-External Feedback, **F**-Differential Pressure, **K**-Captured Vent	12	–	1.62%	7.29%	11.70%
	16	–	1.68%	7.35%	11.80%
	24	–	2.44%	8.11%	12.60%
M-Dual Stage	12	–	0.61%	0.17%	–
	16	–	0.67%	0.23%	–
	24	–	1.43%	0.99%	–

Ordering Information

Build an SGRD series regulator ordering number by combining the designators in the sequence shown below.

Note: Not all options are available for every size of regulator. For more information on the options for each regulator size, see pages 5 to 21.

1	2	3	4	5	6	7	8	9	10	11	12	13	14
SG	R	D	16	C	L	P	N0	M	B	E	D	R	000

1 Type of Regulator
SG = Swagelok general industrial

2 Regulator Function
R = Pressure reducing

3 Loading Mechanism
D = Dome

4 Body Size
12 = 3/4 in./DN20
16 = 1 in./DN25
24 = 1 1/2 in./DN40

5 Body Material
1 = 316L
C = 316L, SC-11 cleaned

6 Control Range
0 = No pilot 6000 psig (413 bar) max
C = 1 to 10 psig (0.07 to 0.68 bar)
D = 2.5 to 25 psig (0.2 to 1.7 bar)
E = 5 to 50 psig (0.3 to 3.4 bar)
F = 10 to 100 psig (0.7 to 6.8 bar)
G = 25 to 250 psig (1.7 to 17.2 bar)
J = 50 to 500 psig (3.4 to 34.4 bar)
L = 100 to 1000 psig (6.9 to 68.9 bar)
M = 150 to 1500 psig (10.3 to 103 bar)
N = 200 to 2000 psig (13.7 to 137 bar)
P = 300 to 3000 psig (20.6 to 206 bar)
R = 360 to 3600 psig (24.8 to 248 bar)
W = 600 to 6000 psig (41.3 to 413 bar)

7 Seat Material
E = Elastomer seat①②
P = PEEK seat

① Not available on control ranges M, N, P, R, or W.
② Maximum inlet pressure 1000 psig (68.9 bar).

8 Connection Type
N0 = NPT female
B0 = BSP (ISO 228) female
FA = ASME RF flange, class 150
FB = ASME RF flange, class 300
FC = ASME RF flange, class 600
FE = ASME RF flange, class 1500
FF = ASME RF flange, class 2500
GB = ASME RTJ flange, class 300
GC = ASME RTJ flange, class 600
GE = ASME RTJ flange, class 1500
GF = ASME RTJ flange, class 2500
DN = EN1092-1 RF flange, PN40

Note: Flanges are not available on body size 08 and have control range limitations. Additional connection options are available, see page 11 for details.

9 Port Configuration
A = See page 12①
B = See page 12①②
C = See page 12①②
F = See page 12①②
M = See page 12

① Only available on control range 0.
② Only available on body size 12.

10 Auxiliary Port Connection
N = Female NPT pipe threads①②③
B = Female ISO/BSP parallel threads

① Only available on control range 0.
② Only available on body size 12.
③ Only available on connection type N0 and N4.

11 Seal Material
V = FKM
N = Nitrile
E = EPDM
L = Low-temperature nitrile

12 Sensor Options
A = No pilot①
D = Standard pilot②
E = EF pilot②
F = Differential pressure pilot③
M = Dual stage pilot④

① Exclusively for control range 0.
② Only available on control ranges E, F, G, J, L, M, N, P, R, and W.
③ Only available on control ranges C, D, E, F, G, and J.
④ Only available on control ranges E, F, G, J, L, M, N, P, and R.

13 Handle Options
0 = Not applicable (no pilot)①
B = Knob (blue)
K = Knob (black)
G = Knob (green)
N = Knob (orange)
Y = Knob (yellow)
R = Knob (red)
3 = Antitamper
4 = Antitamper and factory set

① Exclusively for control range 0.

14 Additional Options
000 = None

See page 21 for options.

General Industrial Pressure-Reducing, Differential Pressure Regulators — SGRD DP Series

Applications

Suitable for a wide variety of industrial applications where differential pressure control is required. The setpoint tracks a reference pressure to maintain a bias pressure.

Features

- Balanced poppet
- Diaphragm sensing
- Modular design
- Dome-to-outlet pressure ratio approximately 1:1
- Antitamper
- Non-venting

Options

- NACE MR0175/ISO 15156
- Special cleaning
- Panel mounting kits sold separately

Technical Data: PEEK Seat

Body Size	Maximum Inlet Pressure psig (bar)	Maximum Outlet Pressure psig (bar)	Adjustable Pressure Range psig (bar)	Sensing Type psig (bar)	Temperature Range °F (°C)	Flow Coefficient (C_v)	Minimum Weight lb (kg)
12	6000 (413)	6000 (413)	5 to 6000 (0.3 to 413)	Diaphragm: 5 to 6000 (0.3 to 413)	–40 to 356° (–40 to 180°) See **Pressure-Temperature Ratings**, page 14	2.3	9.7 (4.4)
16						4.8	26.5 (12.0)
24						10.7	27.6 (12.5)

Technical Data: Elastomer Seat

Body Size	Maximum Inlet Pressure psig (bar)	Maximum Outlet Pressure psig (bar)	Adjustable Pressure Range psig (bar)	Sensing Type psig (bar)	Temperature Range °F (°C)	Flow Coefficient (C_v)	Minimum Weight lb (kg)
12	1000 (68.9)	1000 (68.9)	5 to 1000 (0.3 to 68.9)	Diaphragm: 5 to 1000 (0.3 to 68.9)	–49 to 356° (–45 to 180°) See **Pressure-Temperature Ratings**, page 14	2.3	9.7 (4.4)
16						4.8	26.5 (12.0)
24						10.7	27.6 (12.5)

Materials of Construction

Component	316L	316L NACE
	Material / Specification	
1 *Dome*	*316L SS / A479*	
2 A/T Cover	316L SS / A479	
3 *Stem Nut*	A4-80	
4 *Stem*	*316L SS / A479*	*Monel 550 / B865*
5 Cap screw	304 SS / A193	
6 *Spring button*	*316L SS / A479*	
7 *Set Spring*	*50CRV4 (Size 08,12)* *Elgiloy (Size 16, 24)*	*Alloy X-750 (Size 08,12)* *Elgiloy (Size 16, 24)*
8 *Diaphragm nut*	304 SS / A193	316 SS / A194
9 *Diaphragm*	*EPDM / FKM or Nitrile*	
10 *Upper diaphragm plate*	316L SS / A479	
11 *Lower diaphragm plate*	316L SS / A479	
12 *Diaphragm screw*	*316L SS / A479*	
13 *Body*	*316L SS / A479*	
14 *Body insert*	*316L SS / A479*	
15 *Body insert retainer*	*316L SS / A479*	
16 *Poppet*	*316L SS / A479*	
17 *Seat*	*316L SS / A479 or PEEK*	
18 *Poppet spring*	*Elgiloy*	
19 *O-rings*	*PEEK*	
20 *Backup rings*	*PTFE*	
21 *Circlip*	*316 SS*	
22 *Body plug*	*316L SS / A479*	

Nonwetted lubricant: hydrocarbon-based.

Wetted lubricant: PTFE-based.

Wetted components listed in *italics.*

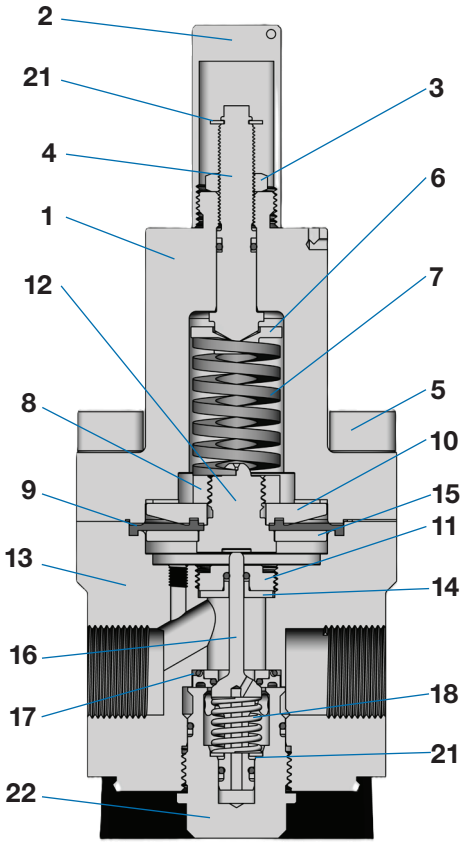

Flow Curves — SGRD DP Series

Please see SGRD flow curves on pages 39 and 40 . For more flow curve information, contact your authorized Swagelok sales and service center or visit swagelok.com to generate your own flow curves.

Maximum Adjustable Bias

The graphs illustrate the maximum spring bias you can set depending on the pressure differential between the inlet and reference pressure. High inlet pressures and low reference pressures reduce the maximum bias pressure that the spring can achieve. The bias can be set in the area below the line on the graph.

SGRD 08/12 (standard)

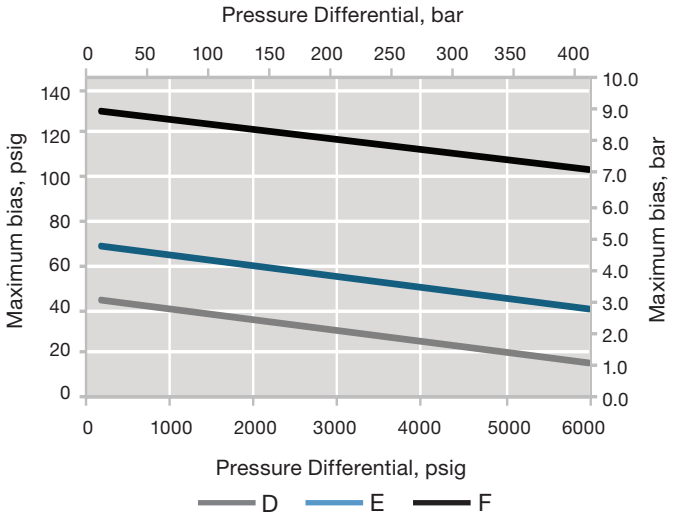

SGRD 08/12 NACE

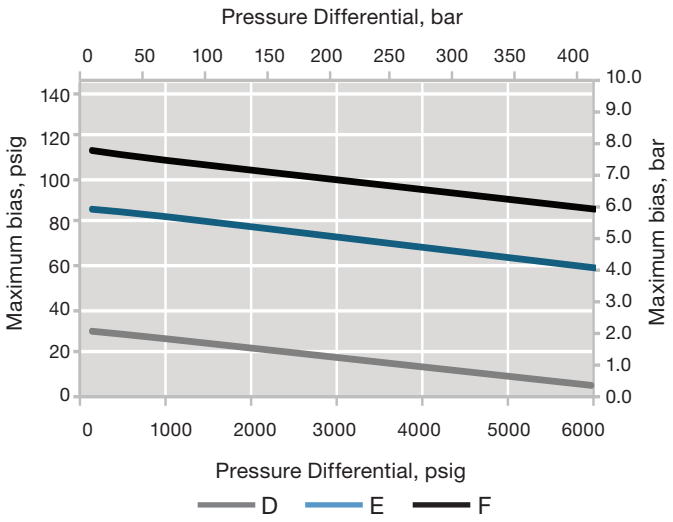

SGRD 16

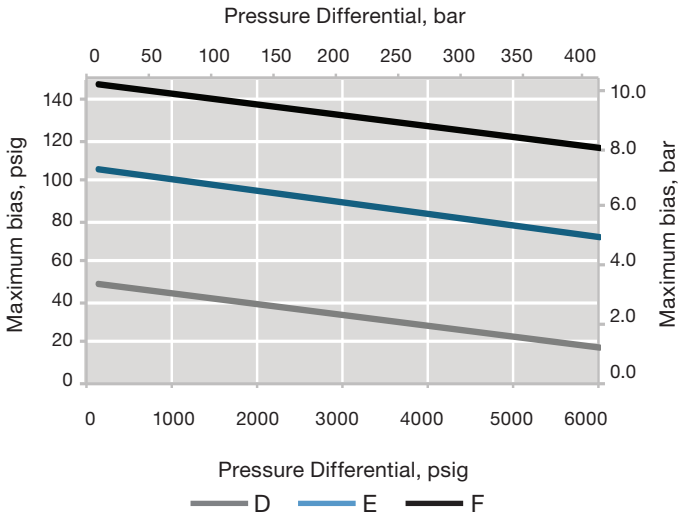

SGRD 24

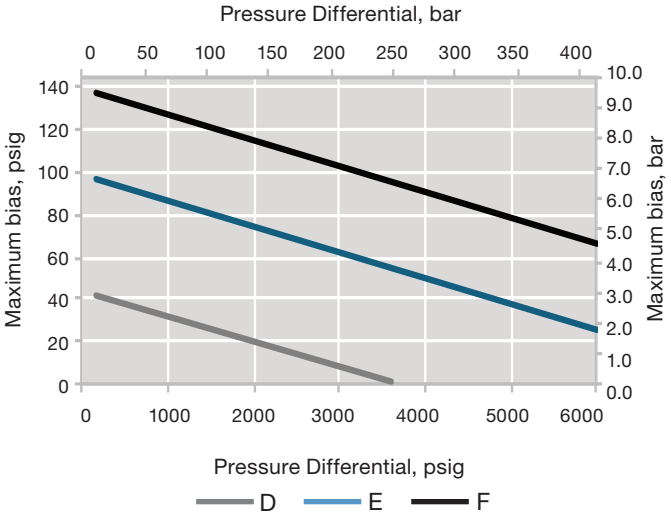

SGRD DP Dimensions

Dimensions, in inches (millimeters), are for reference only and are subject to change. Dimensions based on a threaded connection. See cad.swagelok.com for detailed CAD information of your product.

Body Size	**Dimensions**, in. (mm)					
	A	B	C	D	E	F
08	8.84 (225)	2.91 (74)	3.12 (80)	1.81 (46)	5.37 (136)	1.50 (38)
12	8.84 (225)	3.23 (82)	3.70 (94)	1.81 (46)	5.37 (136)	1.50 (38)
16	11.3 (287)	4.53 (115)	4.33 (110)	2.05 (52)	2.82 (72)	1.77 (45)
24	11.9 (302)	4.53 (115)	4.33 (110)	2.32 (59)	7.52 (191)	2.36 (60)

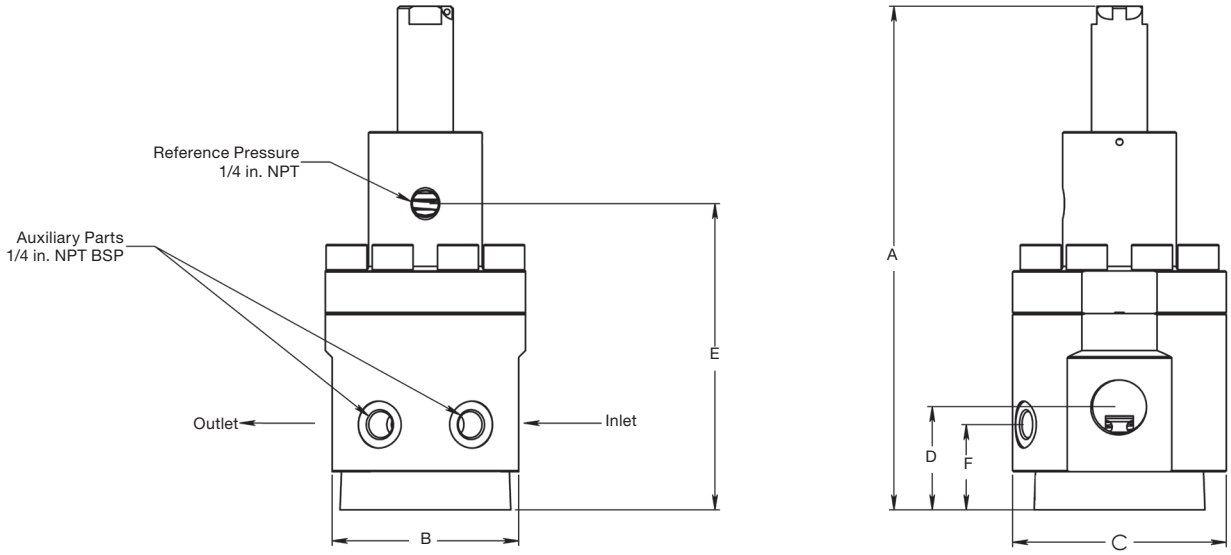

SGRD Supply Pressure Effect

Body Size	Supply Pressure Effect
08	0.62%
12	0.62%
16	0.68%
24	1.44%

Ordering Information

Build an SGRD DP series regulator ordering number by combining the designators in the sequence shown below.
Note: Not all options are available for every size of regulator. For more information on the options for each regulator size, see pages 5 to 21.

1	2	3	4	5	6	7	8	9	10	11	12	13	14
SG	R	D	12	1	C	E	N0	B	N	V	P	3	000

1 Type of Regulator
SG = Swagelok general industrial

2 Regulator Function
R = Pressure reducing

3 Loading Mechanism
D = Dome

4 Body Size
12 = 3/4 in./DN20
16 = 1 in./DN25
24 = 1 1/2 in./DN40

5 Body Material
1 = 316L
C = 316L, SC-11 cleaned
N = 316L, NACE
P = 316L, NACE, SC-11 cleaned

6 Adjustable Bias
D = 2.5 to 25 psig (0.2 to 1.7 bar)
E = 5 to 50 psig (0.3 to 3.4 bar)
F = 10 to 100 psig (0.7 to 6.8 bar)
Note: See page 45 for adjustable bias graphs.

7 Seat Material
E = Elastomer seat①
P = PEEK seat
① Maximum inlet pressure 1000 psig (58.9 bar).

8 Connection Type
N0 = NPT female
B0 = BSP (ISO 228) female
FA = ASME RF flange, class 150
FB = ASME RF flange, class 300
FC = ASME RF flange, class 600
FE = ASME RF flange, class 1500
FF = ASME RF flange, class 2500
GB = ASME RTJ flange, class 300
GC = ASME RTJ flange, class 600
GE = ASME RTJ flange, class 1500
GF = ASME RTJ flange, class 2500
DN = EN1092-1 RF flange, PN40
Note: Flanges are not available on body size 08 and have control range limitations. Additional connection options are available, see page 11 for details.

9 Port Configuration
A = See page 12①
B = See page 12①②
C = See page 12①②
F = See page 12①②
M = See page 12
① Only available on control range 0.
② Only available on body size 12.

10 Auxiliary Port Connection
N = Female NPT pipe threads①②③
B = Female ISO/BSP parallel threads
① Only available on control range 0.
② Only available on body size 12.
③ Only available on connection type N0 and N4.

11 Seal Material
V = FKM
N = Nitrile
E = EPDM
L = Low-temperature nitrile

12 Sensor Options
P = Differential pressure

13 Handle Options
3 = Antitamper

14 Additional Options
000 = None
See page 21 for options.

High Sensitivity Pressure-Reducing, Dome-Loaded Regulators — SHRD Series

Applications

Suitable for a wide variety of industrial applications where manual or remote operation of the regulator is suitable and accurate set pressure control is desired.

Features

- Balanced poppet
- Diaphragm sensing
- Non-venting
- Pilot regulator control

Options

- External feedback to pilot
- Antitamper pilot handle
- Factory set pilot handle
- Special cleaning
- NACE MR0175/ISO 15156

Technical Data: Elastomer Seat

Body Size	Maximum Inlet Pressure psig (bar)	Maximum Outlet Pressure psig (bar)	Adjustable Pressure Range psig (bar)	Sensing Type psig (bar)	Temperature Range °F (°C)	Flow Coefficient (C_v)	Minimum Weight lb (kg)
12	250 (17.2)	250 (17.2)	1 to 250 (0.07 to 17.2)	Diaphragm: 1 to 250 (0.07 to 17.2)	–49 to 356° (–45 to 180°) See **Pressure-Temperature Ratings**, page 14	2.3	9.7 (4.4)
16						4.8	26.5 (12.0)
24						10.7	27.6 (12.5)

Materials of Construction

Component		Material / Specification
Common Components	***1*** *Dome*	*316L SS / A479*
	2 Cap screw	304 SS / A193
	3 *Body*	*316L SS / A479*
	4 *Body insert*	
	5 *Body insert retainer*	
	6 *Poppet*	
	7 *Seat*	*316L SS / A479 or PEEK*
	8 *Poppet spring*	*Elgiloy*
	9 *O-rings*	*EPDM, FKM, or nitrile*
	10 *Backup rings*	*PTFE*
	11 *Circlip*	*316 SS*
	12 *Body plug*	*316L SS / A479*
Sensing Mechanism	**Diaphragm Only**	
	13 *Diaphragm nut*	*304 SS / A193*
	14 *Diaphragm*	*EPDM, FKM, or nitrile*
	15 *Upper diaphragm plate*	*316L SS / A479*
	16 *Lower diaphragm plate*	
	17 *Diaphragm screw*	

Nonwetted lubricant: hydrocarbon-based.

Wetted lubricant: PTFE-based.

Wetted components listed in *italics.*

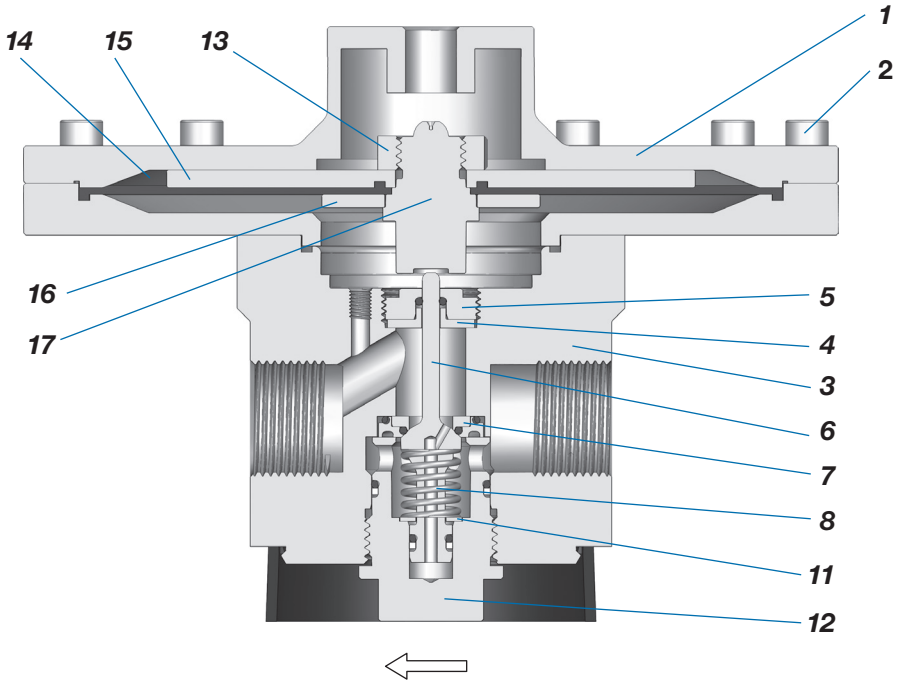

Flow Curves — SHRD Series

The graphs below illustrate the change or “droop” in outlet pressures as the flow rate increases. For more flow curve information, contact your authorized Swagelok sales and service center or visit swagelok.com to generate your own flow curves.

Note: Elastomer and PEEK curves are very similar and may be plotted over each other.

SHRD12

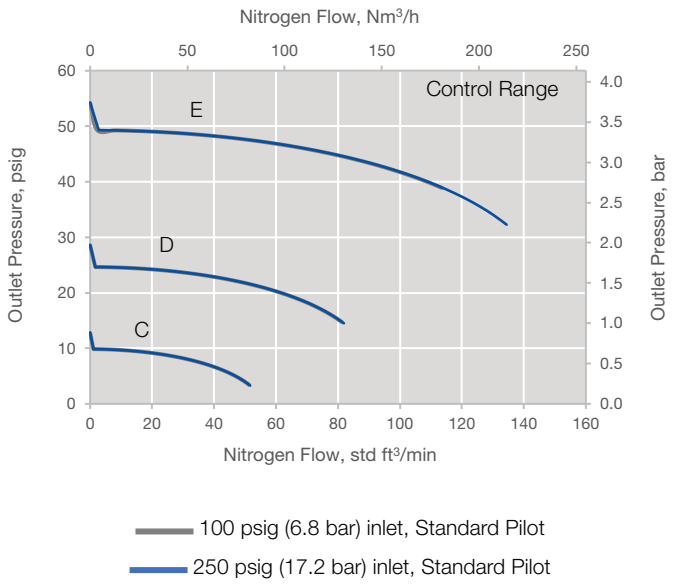

SHRD16

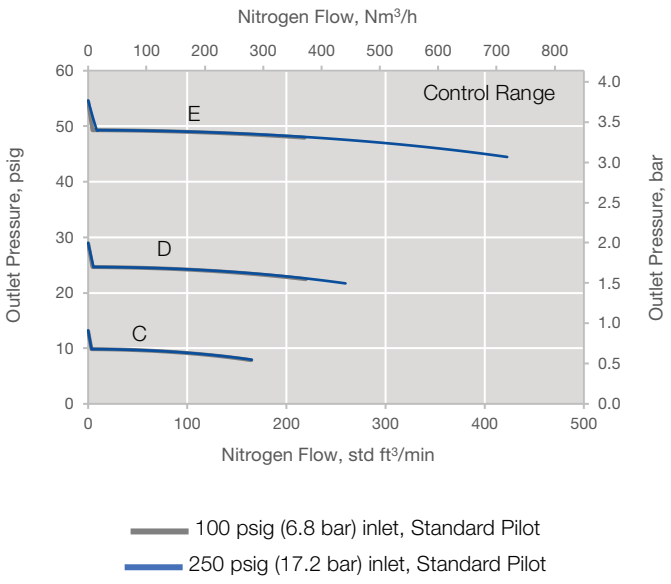

SHRD24

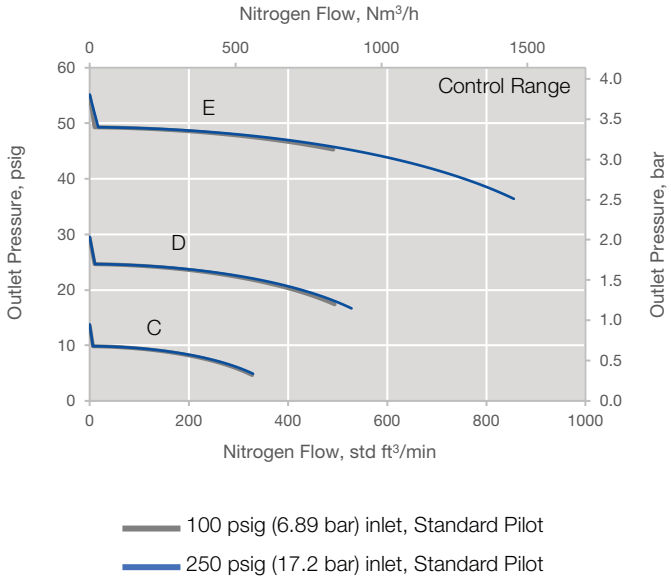

SHRD Dimensions

Dimensions, in inches (millimeters), are for reference only and are subject to change. Dimensions based on a threaded connection. See cad.swagelok.com for detailed CAD information of your product.

Body Size	Dimensions, in. (mm)				
	A	B	C	D	F
12	5.31 (135)	3.23 (82)	3.70 (94)	1.81 (46)	1.50 (38)
16	6.47 (164)	4.53 (115)	4.33 (110)	2.05 (52)	1.77 (45)
24	7.06 (179)	4.53 (115)	4.33 (110)	2.32 (59)	2.36 (60)

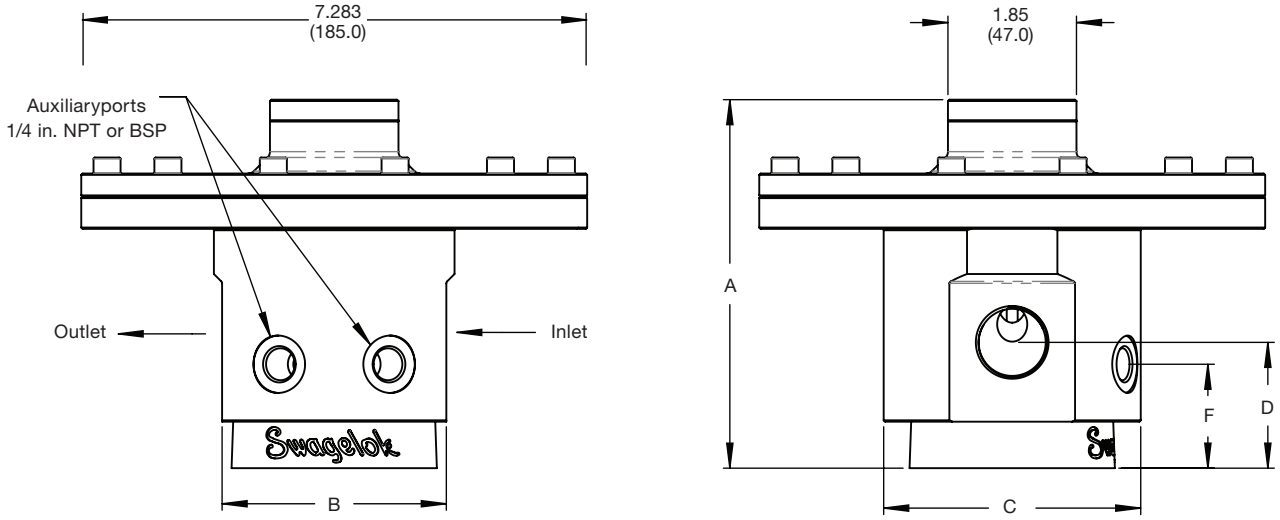

SHRD Supply Pressure Effect

Sensor Option	Body Size	Supply Pressure Effect
A-No Pilot	12	0.07%
	16	0.12%
	24	0.26%
D-Standard, **E**-External Feedback, **K**-Captured Vent	12	1.07%
	16	1.12%
	24	1.26%

Ordering Information

Build an SHRD series regulator ordering number by combining the designators in the sequence shown below.

Note: Not all options are available for every size of regulator. For more information on the options for each regulator size, see pages 5 to 21.

1	2	3	4	5	6	7	8	9	10	11	12	13	14
SH	R	D	24	1	0	E	N0	A	B	V	A	0	000

1 Type of Regulator
SH = Swagelok high sensitivity

2 Regulator Function
R = Pressure reducing

3 Loading Mechanism
D = Dome

4 Body Size
12 = 3/4 in./DN20
16 = 1 in./DN25
24 = 1 1/2 in./DN40

5 Body Material
1 = 316L
C = 316L, SC-11 cleaned

6 Control Range
0 = No pilot 250 psig (17.2 bar) max
C = 1 to 10 psig (0.07 to 0.68 bar)
D = 2.5 to 25 psig (0.2 to 1.7 bar)
E = 5 to 50 psig (0.3 to 3.4 bar)
F = 10 to 100 psig (0.7 to 6.8 bar)
G = 25 to 250 psig (1.7 to 17.2 bar)

7 Seat Material
E = Elastomer seat, 250 psig (17.2 bar)

8 Connection Type
N0 = NPT female
B0 = BSP (ISO 228) female
FA = ASME RF flange, class 150
DN = EN (DIN) RF flange, PN40

Note: Flanges are not available on body size 08 and have control range limitations. Additional connection options are available, see page 11 for details.

9 Port Configuration
A = See page 12①
B = See page 12①②
C = See page 12①②
F = See page 12①②
M = See page 12

① Only available on control range 0.
② Only available on body size 12.

10 Auxiliary Port Connection
N = Female NPT pipe threads①②③
B = Female ISO/BSP parallel threads

① Only available on control range 0.
② Only available on body size 12.
③ Only available on connection type N0 and N4.

11 Seal Material
V = FKM
N = Nitrile
E = EPDM
L = Low-temperature nitrile

12 Sensor Options
A = No pilot①
D = Standard pilot
E = EF pilot

① Exclusively for control range 0.

13 Handle Options
0 = Not applicable (no pilot)①
B = Knob (blue)
K = Knob (black)
G = Knob (green)
N = Knob (orange)
Y = Knob (yellow)
R = Knob (red)
3 = Antitamper
4 = Antitamper and factory set

① Exclusively for control range 0.

14 Additional Options
000 = None

See page 21 for options.

General Industrial Pressure-Reducing, Ratio Regulators — SGRA Series

Applications

Suitable for a wide variety of industrial applications where remote operation of the regulator is suitable.

Features

- Balanced poppet
- Ratio sensing
- Modular design
- Air-loaded pressure control with a choice of dome-to-outlet pressure ratios

Options

- Non-venting
- Self-venting
- Captured vent
- Special cleaning
- NACE MR0175/ISO 15156

Technical Data: PEEK Seat

Body Size	Maximum Inlet Pressure psig (bar)	Maximum Outlet Pressure psig (bar)	Maximum Dome Pressure psig (bar)	Adjustable Pressure Range psig (bar)	Sensing Type psig (bar)	Temperature Range °F (°C)	Flow Coefficient (C_V)	Minimum Weight lb (kg)
08	6000 (413)	6000 (413)	250 (17.2)	5 to 6000 (0.3 to 413)	Ratio: 5:1 (Diaphragm) Ratio: 15:1, 40:1, 70:1 (Piston)	–40 to 356° (–40 to 180°) See **Pressure-Temperature Ratings**, page 14	1.95	19.2 (8.7)
12							2.3	20.3 (9.2)

Technical Data: Elastomer Seat

Body Size	Maximum Inlet Pressure psig (bar)	Maximum Outlet Pressure psig (bar)	Maximum Dome Pressure psig (bar)	Adjustable Pressure Range psig (bar)	Sensing Type psig (bar)	Temperature Range °F (°C)	Flow Coefficient (C_V)	Minimum Weight lb (kg)
08	1000 (68.9)	1000 (68.9)	250 (17.2)	5 to 1000 (0.3 to 68.9)	Ratio: 5:1 (Diaphragm) Ratio: 15:1, 40:1, 70:1 (Piston)	–49 to 356° (–45 to 180°) See **Pressure-Temperature Ratings**, page 14	1.95	19.2 (8.7)
12							2.3	20.3 (9.2)

Materials of Construction

Component		Material / Specification
Common Components	*1 Dome*	*316L SS / A479*
	2 Dish	
	3 *Cap screw*	304 SS / A193
	4 *Body*	*316L SS / A479*
	5 *Body insert*	
	6 *Body insert retainer*	
	7 *Poppet*	
	8 *Seat*	*316L SS / A479 or PEEK*
	9 *Poppet spring*	*Elgiloy*
	10 *O-rings*	*EPDM, FKM, or nitrile*
	11 *Backup rings*	*PTFE*
	12 *Circlip*	*316 SS*
	13 *Body plug*	*316L SS / A479*
Sensing Mechanism	**Diaphragm Only**	
	14 *Diaphragm nut*	*304 SS / A193*
	15 *Diaphragm*	*EPDM, FKM, or nitrile*
	16 *Upper diaphragm plate*	*316L SS / A479*
	17 *Lower diaphragm plate*	
	18 *Diaphragm screw*	
	Piston Only	
	19 *Piston*	*316L SS / A479*
	20 *Piston plate*	
Options	***21*** *Vent plate*	

Nonwetted lubricant: hydrocarbon-based.
Wetted lubricant: PTFE-based.
Wetted components listed in *italics*.

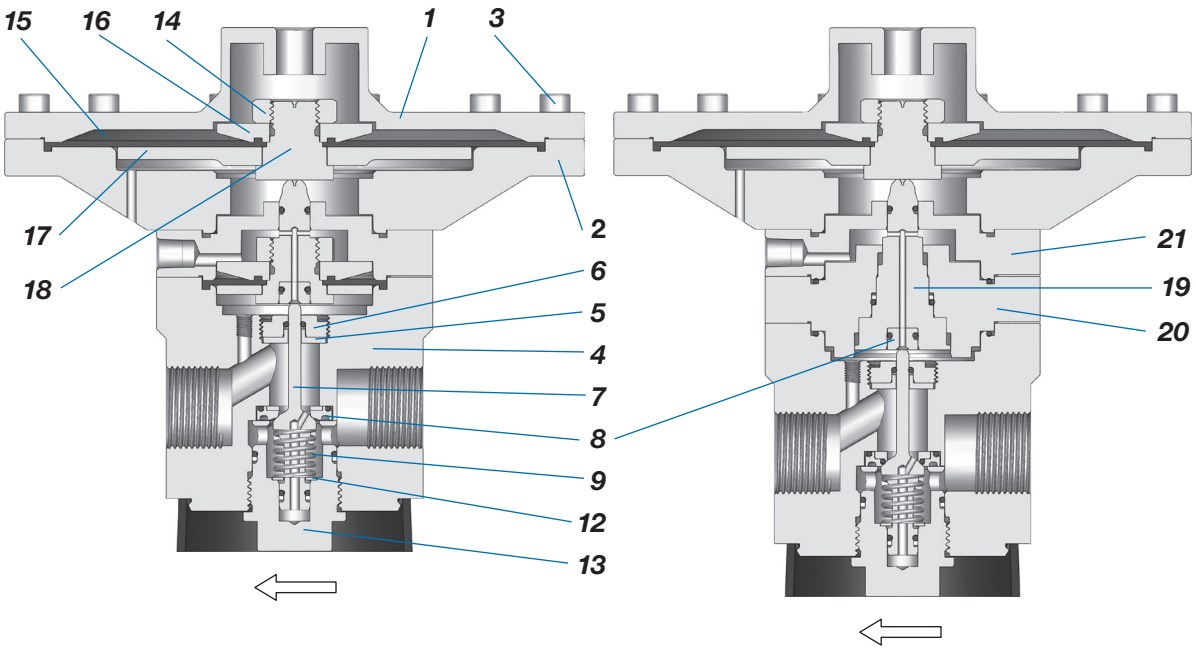

Flow Curves — SGRA Series

The graphs below illustrate the change or “droop” in outlet pressures as the flow rate increases. For more flow curve information, contact your authorized Swagelok sales and service center or visit swagelok.com to generate your own flow curves.

Note: Elastomer and PEEK curves are very similar and may be plotted over each other.

SGRA12

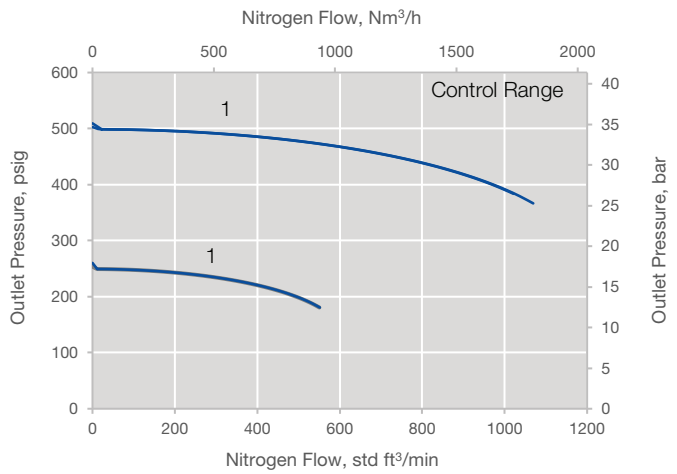

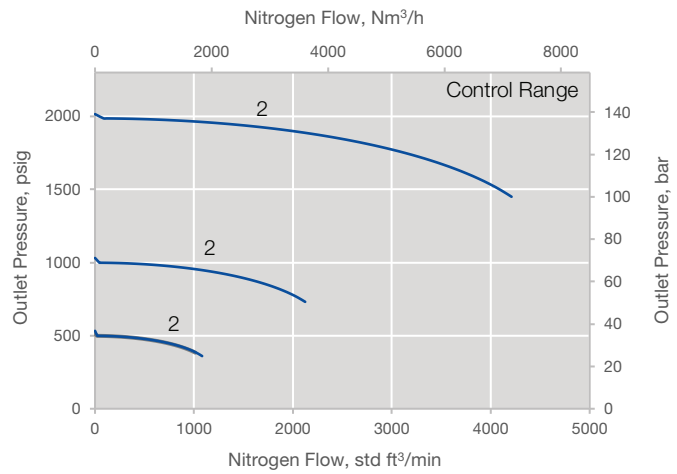

1000 psig (68.9 bar) inlet, elastomer seat

6000 psig (413bar) inlet, PEEK seat

SGRA12

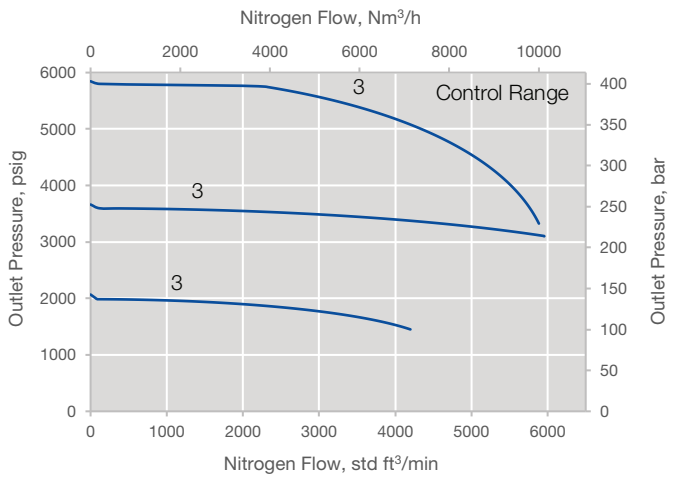

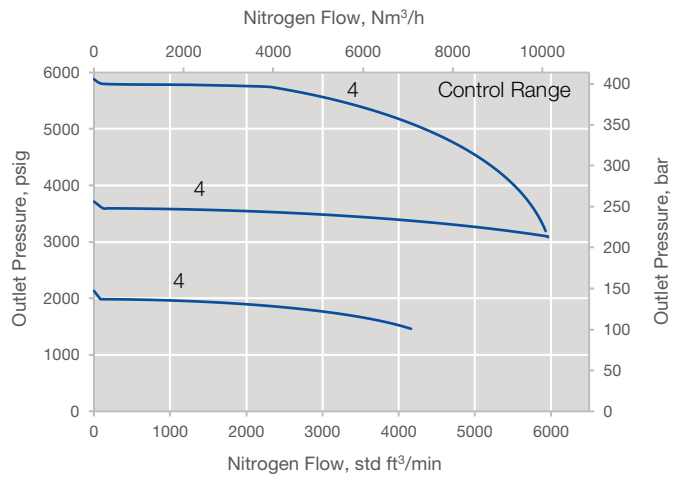

1000 psig (68.9 bar) inlet, elastomer seat

6000 psig (413bar) inlet, PEEK seat

SGRA Dimensions

Dimensions, in inches (millimeters), are for reference only and are subject to change. Dimensions based on a threaded connection. See cad.swagelok.com for detailed CAD information of your product.

Body Size	**Dimensions**, in. (mm)					
	A	B	C	D	E	F
08	6.00 (153)①	2.91 (74)	3.12 (80)	1.81 (46)	3.74 (95)	1.50 (38)
12	6.00 (153)①	3.23 (82)	3.70 (94)	1.81 (46)	3.74 (95)	1.50 (38)

① Based on a diaphragm sensing unit, dimension will increase by 15 mm for piston sensing, and a further 15 mm for captured or self-vent options.

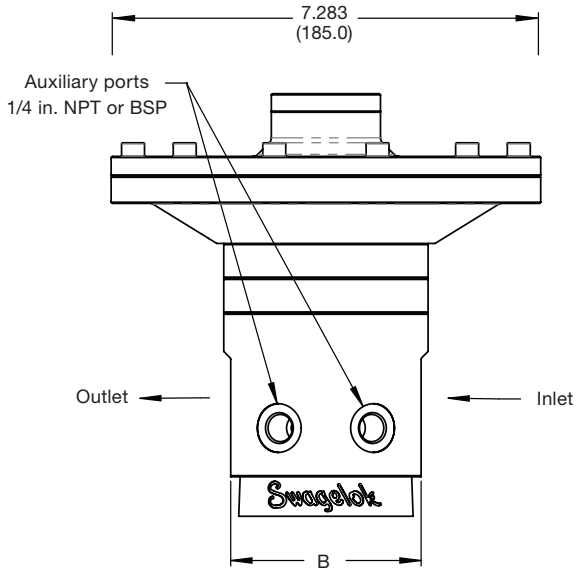

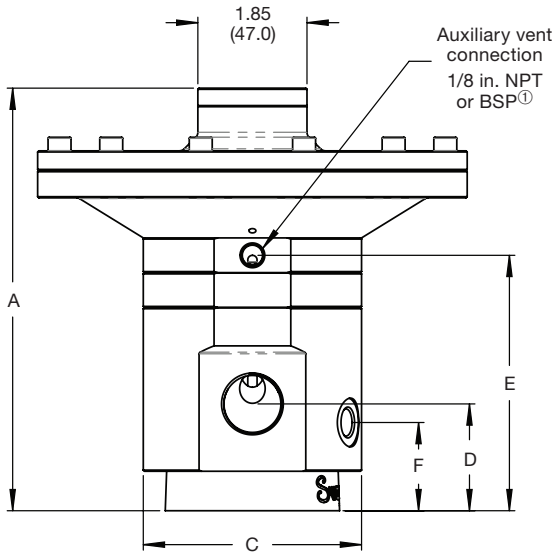

① For flange-style regulators, the vent port will be positioned 90° anti-clockwise (when viewed from the top of the regulator) to ensure adequate clearance from the flanges. When a BSP auxiliary port is connected in combination, the use of a Swagelok RSNB gasket is recommended.

SGRA Supply Pressure Effect

Body Size	**Dome-to-Outlet Ratio**			
	1	2	3	4
08	0.62%	1.98%	5.36%	9.16%
12	0.62%	1.98%	5.36%	9.16%

Ordering Information

Build an SGRA series regulator ordering number by combining the designators in the sequence shown below.

Note: Not all options are available for every size of regulator. For more information on the options for each regulator size, see pages 5 to 21.

1	2	3	4	5	6	7	8	9	10	11	12	13	14
SG	R	A	08	1	3	P	B0	A	B	V	A	0	000

1 Type of Regulator
SG = Swagelok general industrial

2 Regulator Function
R = Pressure reducing

3 Loading Mechanism
A = Ratio

4 Body Size
08 = 1/2 in./DN15
12 = 3/4 in./DN20

5 Body Material
1 = 316L
C = 316L, SC-11 cleaned

6 Dome-to-outlet ratio
1 = 1:5①
2 = 1:15②
3 = 1:40
4 = 1:70

① Control range is limited to 1250 psig (86 bar) with a maximum dome pressure of 250 psig (17.2 bar).

② Control range is limited to 3750 psig (258 bar) with a maximum dome pressure of 250 psig (17.2 bar).

7 Seat Material
E = Elastomer seat①
P = PEEK seat

① Maximum inlet pressure 1000 psig (68.9 bar).

8 Connection Type
N0 = NPT female
B0 = BSP (ISO 228) Female
FA = ASME RF flange, class 150
FB = ASME RF flange, class 300
FC = ASME RF flange, class 600
FE = ASME RF flange, class 1500
FF = ASME RF flange, class 2500
GB = ASME RTJ flange, class 300
GC = ASME RTJ flange, class 600
GE = ASME RTJ flange, class 1500
GF = ASME RTJ flange, class 2500
DN = EN (DIN) RF flange, PN40

Note: Flanges are not available on body size 08 and have control range limitations. Additional connection options are available, see page 11 for details.

9 Port Configuration
A = See page 12
B = See page 12
C = See page 12
F = See page 12
M = See page 12

10 Auxiliary Port Connection
N = Female NPT pipe threads①
B = Female ISO/BSP parallel threads

① Only available on connection type N0 and N4.

11 Seal Material
V = FKM
N = Nitrile
E = EPDM
L = Low-temperature nitrile

12 Sensor Options
A = Non-venting
B = Self-venting
C = Captured vent

13 Handle Options
0 = Not applicable

14 Additional Options
000 = None
See page 21 for options.

High Pressure-Reducing, Ratio-Loaded Regulators — SFRA Series

Applications

Suitable for a wide variety of industrial applications where remote operation of the regulator is suitable.

Features

- Balanced poppet
- Piston sensing
- Modular design
- Body material construction 316 SS >12% Ni
- Patented removable cartridge design allows servicing without the need to remove the product from the dispenser system

Options

- Special cleaning
- PID control unit using 4-20mA signal
- North American HAZLOC certified
- ATEX & IECEx Hazardous location certified

SFRA Air Driven

SFRA with SEPC Installed

Technical Data

Body Size	Maximum Inlet Pressure psig (bar)	Maximum Outlet Pressure psig (bar)	Adjustable Pressure Range psig (bar)	Sensing Type	Temperature Range °F (°C)	Flow Coefficient (C_v)	Minimum Weight lb (kg)
09	15 228 (1 050)	15 228 (1 050)	1 450 to 14 500 (100 to 1 000)	Piston	–40 to 185 (–40 to 85)	1.95	39.7 (18)

Materials of Construction

Component	Material / Specification
1 *Dome*	*316L SS / A479*
2 *Diaphragm nut*	*304 SS / A193*
3 *Diaphragm screw*	*316L SS / A479*
4 *Upper diaphragm plate*	
5 Lower diaphragm plate	316L SS / A479
6 *Diaphragm*	*Nitrile*
7 Cap screw	316L SS / A479
8 *Dish*	*316L SS / A479*
9 *Body*	
10 *Piston*	
11 *Piston retainer*	
12 *Body plug*	
13 Body plug flange	316L SS / A479
14 *Seat Support*	*316L SS / A479*
15 *Seat*	*PEEK*
16 *Poppet*	*316L SS / A479*
17 *Poppet Spring*	*Elgiloy*
18 *Circlip*	*316 SS*
19 *O-rings*	*FKM*
20 *Backup Rings*	*PTFE / Nylon*

Nonwetted lubricant: hydrocarbon-based.

Wetted lubricant: PTFE-based.

Wetted components listed in *italics.*

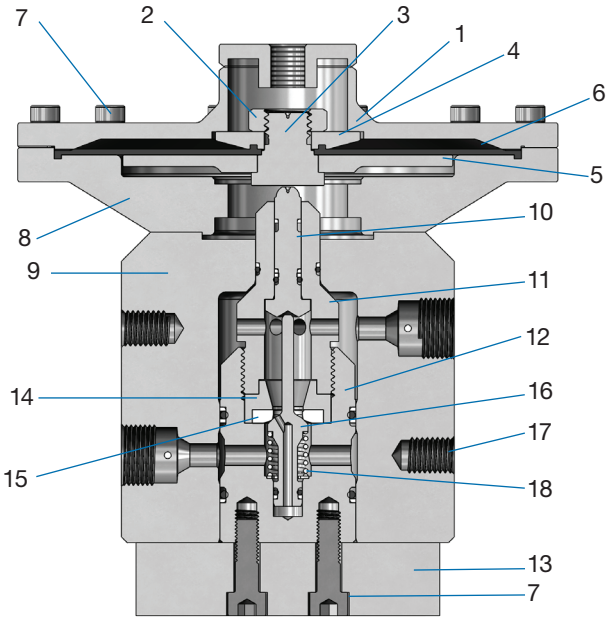

Flow Curves — SFRA Series

The graphs illustrate the change or “droop” in outlet pressures as the flow rate increases. For more flow curve information, contact your authorized Swagelok sales and service centre or visit swagelok.com to generate your own flow curves.

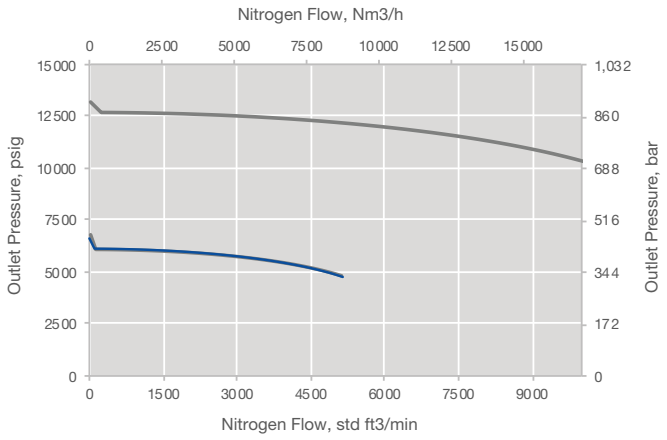

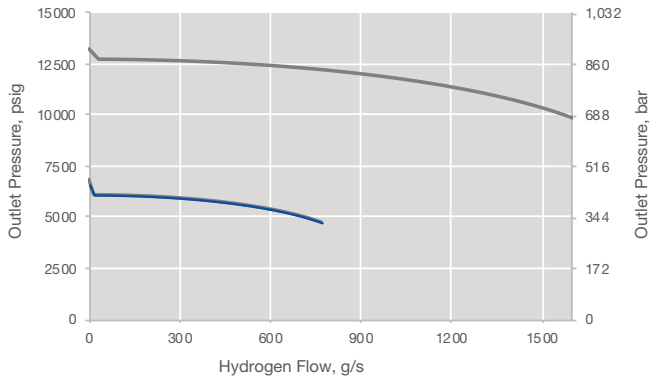

Ratio Linearity

The graphs illustrate the change in outlet set pressure as dome pressure is increased. Changes in inlet pressure will have an effect on setpoint.

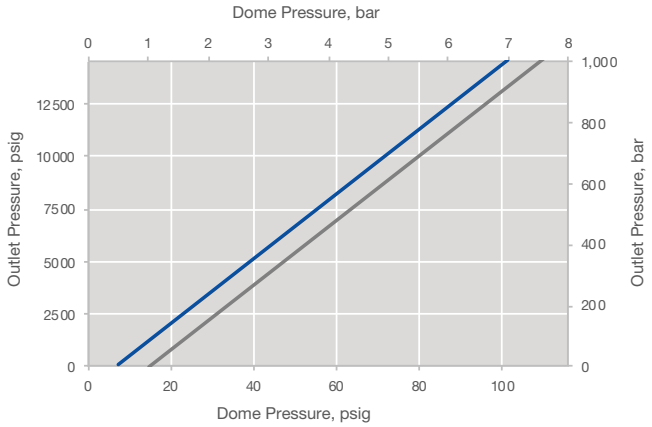

SFRA Dimensions: Air Driven

Dimensions, in inches (millimeters), are for reference only and are subject to change. Dimensions based on a threaded connection. See cad.swagelok.com for detailed CAD information of your product.

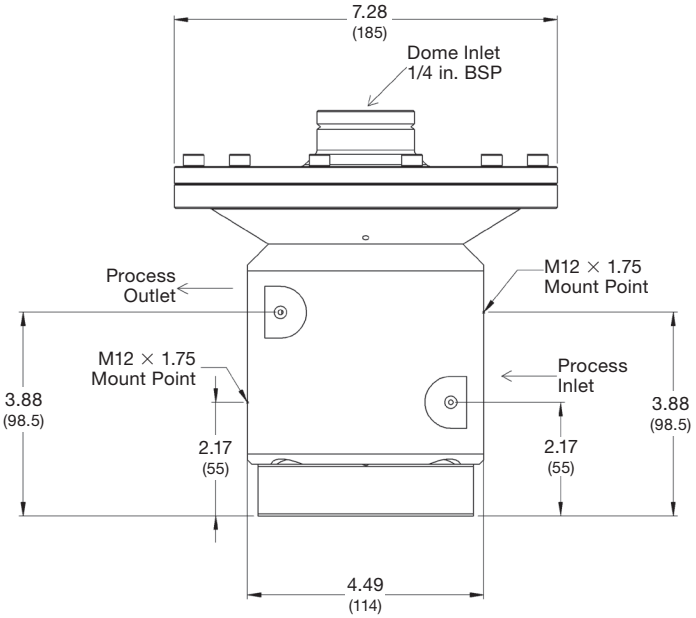

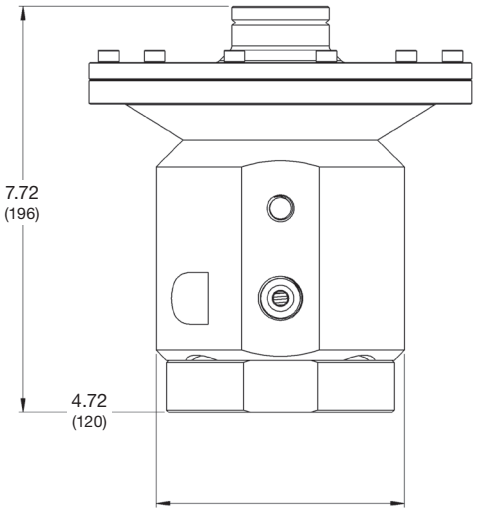

SFRA Dimensions: SEPC Installed

Dimensions, in inches (millimeters), are for reference only and are subject to change. Dimensions based on a threaded connection. See cad.swagelok.com for detailed CAD information of your product.

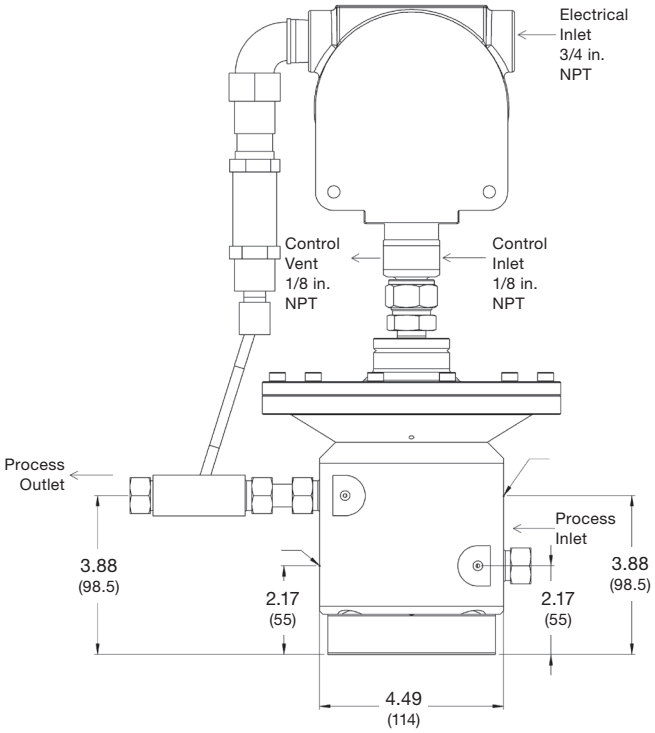

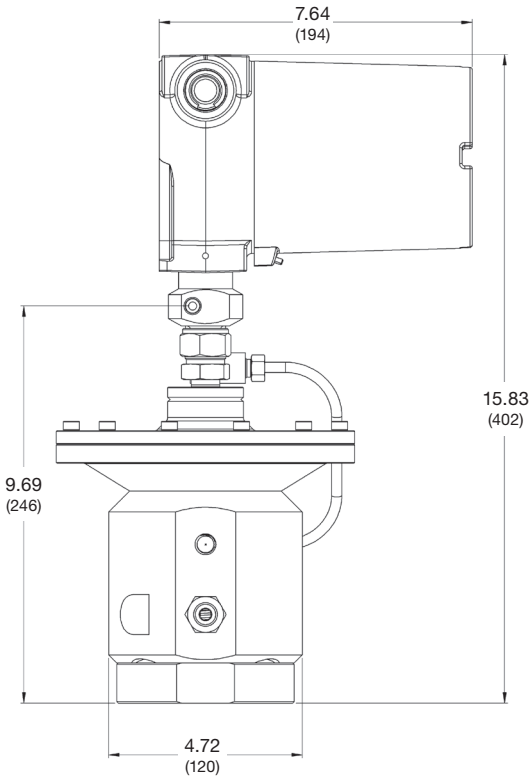

SFRA Supply Pressure Effect

Body Size	Supply Pressure Effect
09	18.30%

Ordering Information

Build an SFRA series regulator ordering number by combining the designators in the sequence shown below.

1	2	3	4	5	6	7	8	9	10	11	12	13	14
SF	R	A	09	1	5	P	K2	A	B	T	A	8	000

1 Type of Regulator
SF = Swagelok High Pressure

2 Regulator Function
R = Pressure reducing

3 Loading Mechanism
A = Ratio

4 Body Size
09 = 9/16 in

5 Body Material
1 = 316L
C = 316L, SC-11 cleaned

6 Dome-to-Outlet Ratio
5 = 1:150

7 Seat Material
P = PEEK seat

8 Connection Type
K2 = 1/2 in FK (8FK)
V0 = 9/16 in. IPT (9MF)

9 Port Configuration
A = One inlet port, one outlet port, no gauge ports

10 Auxiliary Port Connection
B = Female ISO/BSP parallel threads

11 Seal Material
T = Low Temperature EPDM

12 Sensor Options
A = Non-Venting

13 Actuation Options
0 = Not applicable (no pilot)
8 = North American HAZLOC SEPC pilot
9 = ATEX and IECEx SEPC pilot

14 Additional Options
000 = None

General Industrial Back-Pressure, Spring-Loaded Regulators — SGBS Series

Applications

Suitable for a wide variety of industrial applications where manual operation of the regulator is suitable.

Features

- Balanced poppet
- Diaphragm or piston sensing
- Modular design
- Handle actuation

Options

- Antitamper handle
- Factory set and locked handle
- Special cleaning
- NACE MR0175/ISO 15156
- Panel mounting kits sold separately

Technical Data: PEEK Seat

Body Size	Maximum Inlet Pressure psig (bar)	Maximum Outlet Pressure psig (bar)	Adjustable Pressure Range psig (bar)	Sensing Type psig (bar)	Temperature Range °F (°C)	Flow Coefficient (C_v)	Minimum Weight lb (kg)
08	6000 (413)	6000 (413)	5 to 6000 (0.3 to 413)	Diaphragm: 5 to 375 (0.3 to 25.8) Piston: 375 to 6000 (25.8 to 413)	–40 to 356° (–40 to 180°) See **Pressure-Temperature Ratings**, page 14	1.95	11.2 (5.2)
12						2.3	12.5 (5.6)
16			5 to 3600 (0.3 to 248)	Diaphragm: 5 to 250 (0.3 to 17.2) Piston: 250 to 6000 (17.2 to 413)		4.8	27.3 (12.4)
24						10.7	28.7 (13.0)

Technical Data: Elastomer Seat

Body Size	Maximum Inlet Pressure psig (bar)	Maximum Outlet Pressure psig (bar)	Adjustable Pressure Range psig (bar)	Sensing Type psig (bar)	Temperature Range °F (°C)	Flow Coefficient (C_v)	Minimum Weight lb (kg)
08	1000 (68.9)	1000 (68.9)	5 to 1000 (0.3 to 68.9)	Diaphragm: 0 to 375 (0 to 25.8) Piston: 375 to 1000 (25.8 to 68.9)	–49 to 356° (–45 to 180°) See **Pressure-Temperature Ratings**, page 14	1.95	11.2 (5.2)
12						2.3	12.5 (5.6)
16				Diaphragm: 5 to 250 (0.3 to 17.2) Piston: 250 to 1000 (17.2 to 68.9)		4.8	27.3 (12.4)
24						10.7	28.7 (13.0)

Materials of Construction

Component			Material / Specification
Common Components	1	Spring housing	316L SS / A479
	2	Slot cover	Nylon
	3	Stem	316L SS / A479
	4	Upper spring button	
	5	Set spring	51CrV4 / EN 10089 or ASTM A401
	6	Cap screw	304 SS / A193
	7	Lower spring button	316L SS / A479
	8	*Body*	
	9	*Poppet*	
	10	*Seat*	*316L SS / A479 or PEEK*
	11	*Poppet spring*	*Elgiloy*
	12	*O-rings*	*EPDM, FKM, or nitrile*
	13	*Backup rings*	*PTFE*
	14	*Body plug*	*316L SS / A479*
Actuation	15	Knob	Nylon
	16	Knob cover	Plastic
	17	Disc spring	316 SS
	18	Washer	
	19	Circlip	
	20	Screw	304 SS / A193
	21	A/T upper	316L SS / A479
	22	A/T inner	
	23	A/T outer	
Sensing Mechanism	**Diaphragm Only**		
	24	*Diaphragm nut*	*304 SS / A193*
	25	*Diaphragm*	*EPDM, FKM, or nitrile*
	26	*Upper diaphragm plate*	*316L SS / A479*
	27	*Lower diaphragm plate*	
	28	*Diaphragm screw*	
	Piston Only		
	29	*Piston*	*316L SS / A479*
	30	*Piston plate*	
	31	*Seat support ring*	*316L SS / EPDM, FKM, or Nitrile (size 16 and 24 only)*

Nonwetted lubricant: hydrocarbon-based.
Wetted lubricant: PTFE-based.
Wetted components listed in *italics.*

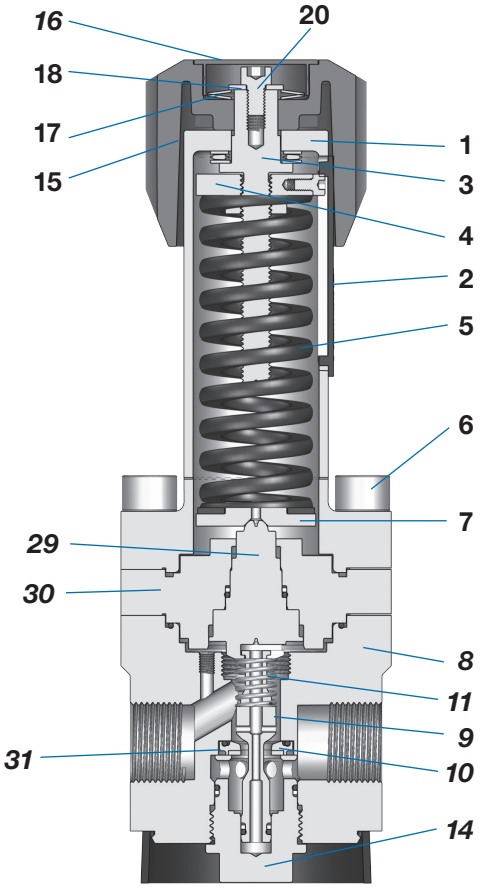

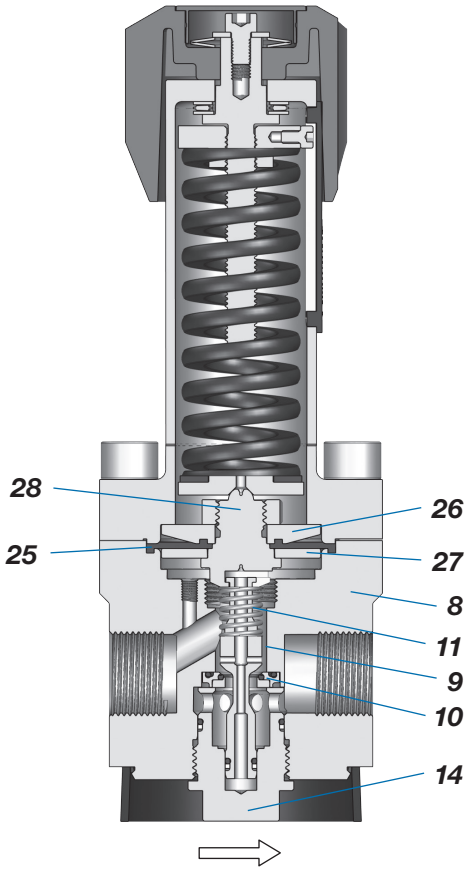

Flow Curves — SGBS Series

The graphs below illustrate the change or "accumulation" in inlet pressures as the flow rate increases. For more flow curve information, contact your authorized Swagelok sales and service center or visit swagelok.com to generate your own flow curves.

Note: Elastomer and PEEK curves are very similar and may be plotted over each other.

SGBS12

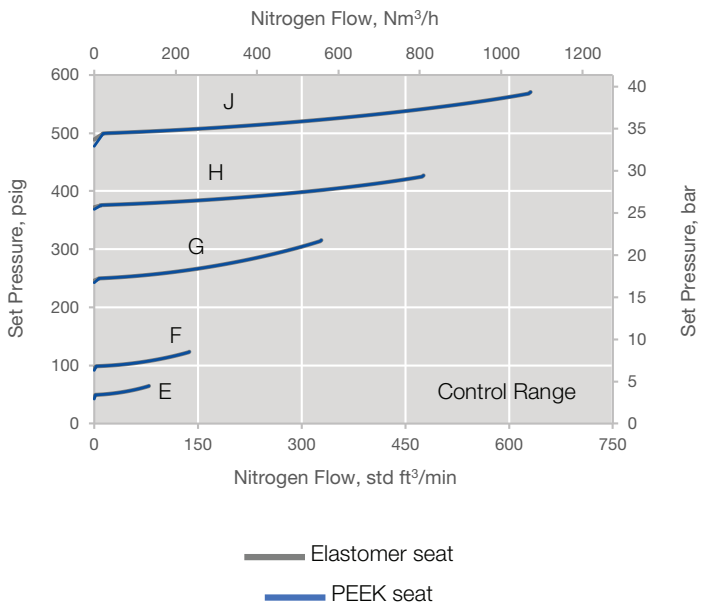

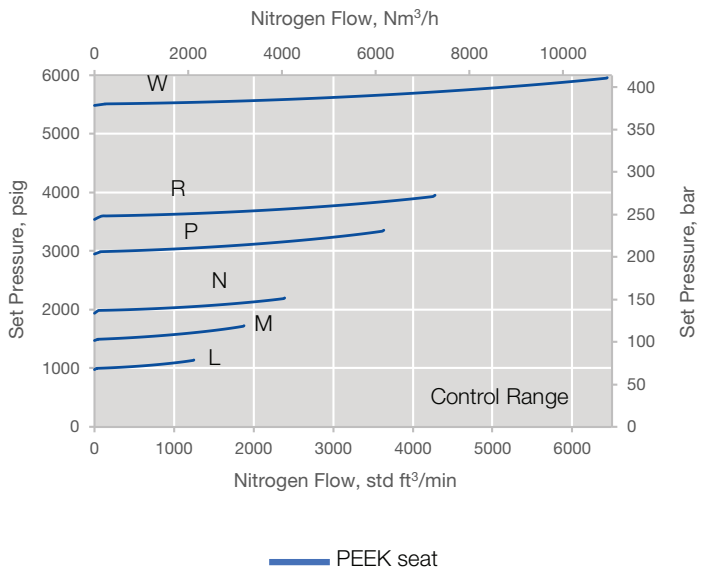

SGBS16

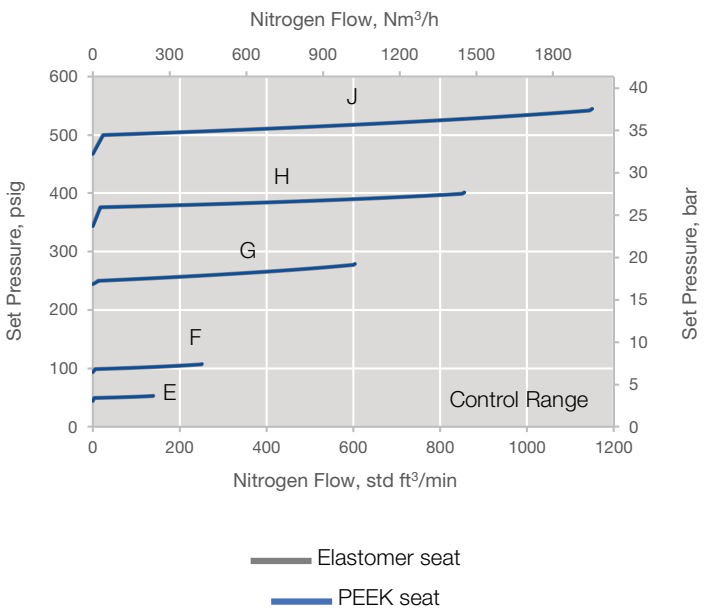

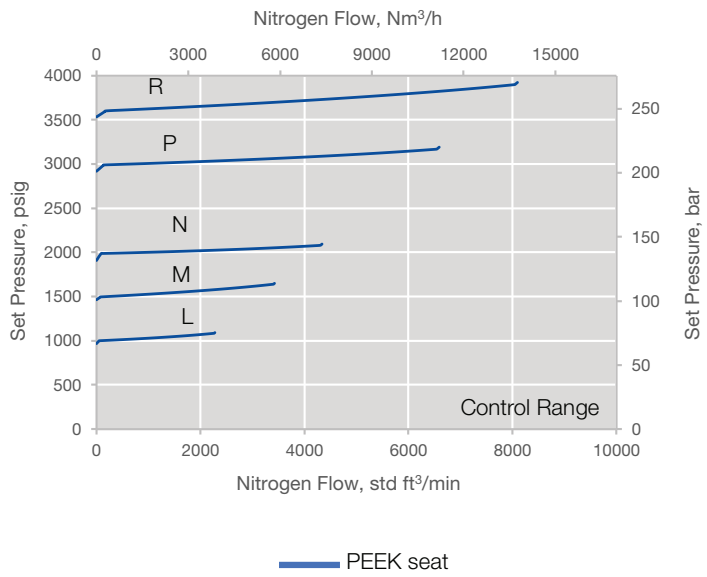

Flow Curves — SGBS Series

The graphs below illustrate the change or “accumulation” in inlet pressures as the flow rate increases. For more flow curve information, contact your authorized Swagelok sales and service center or visit swagelok.com to generate your own flow curves.

SGBS24

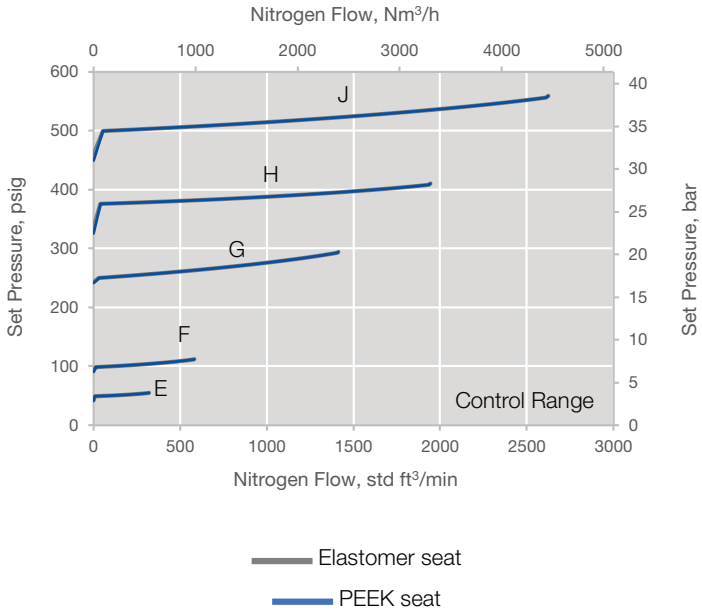

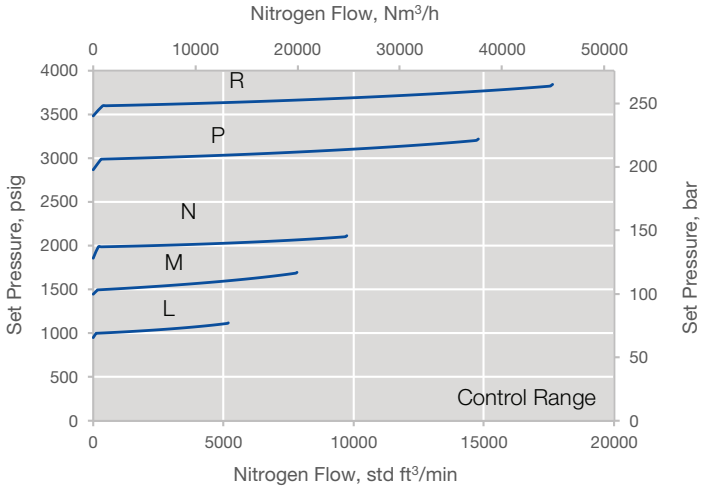

Elastomer seat

PEEK seat

PEEK seat

SGBS Dimensions

Dimensions, in inches (millimeters), are for reference only and are subject to change. Dimensions based on a threaded connection. See cad.swagelok.com for detailed CAD information of your product.

Body Size	**Dimensions**, in. (mm)				
	A	**B**	**C**	**D**	**F**
08	10.0 (254)①	2.91 (74)	3.12 (80)	1.81 (46)	1.50 (38)
12	10.0 (254)①	3.23 (82)	3.70 (94)	1.81 (46)	1.50 (38)
16	11.0 (280)②	4.53 (115)	4.33 (110)	2.05 (52)	1.77 (45)
24	11.6 (295)②	4.53 (115)	4.33 (110)	2.32 (59)	2.36 (60)

① Based on a diaphragm sensing unit, dimension will increase by 15 mm for piston sensing.

② Based on a diaphragm sensing unit, dimension will increase by 20 mm for piston sensing.

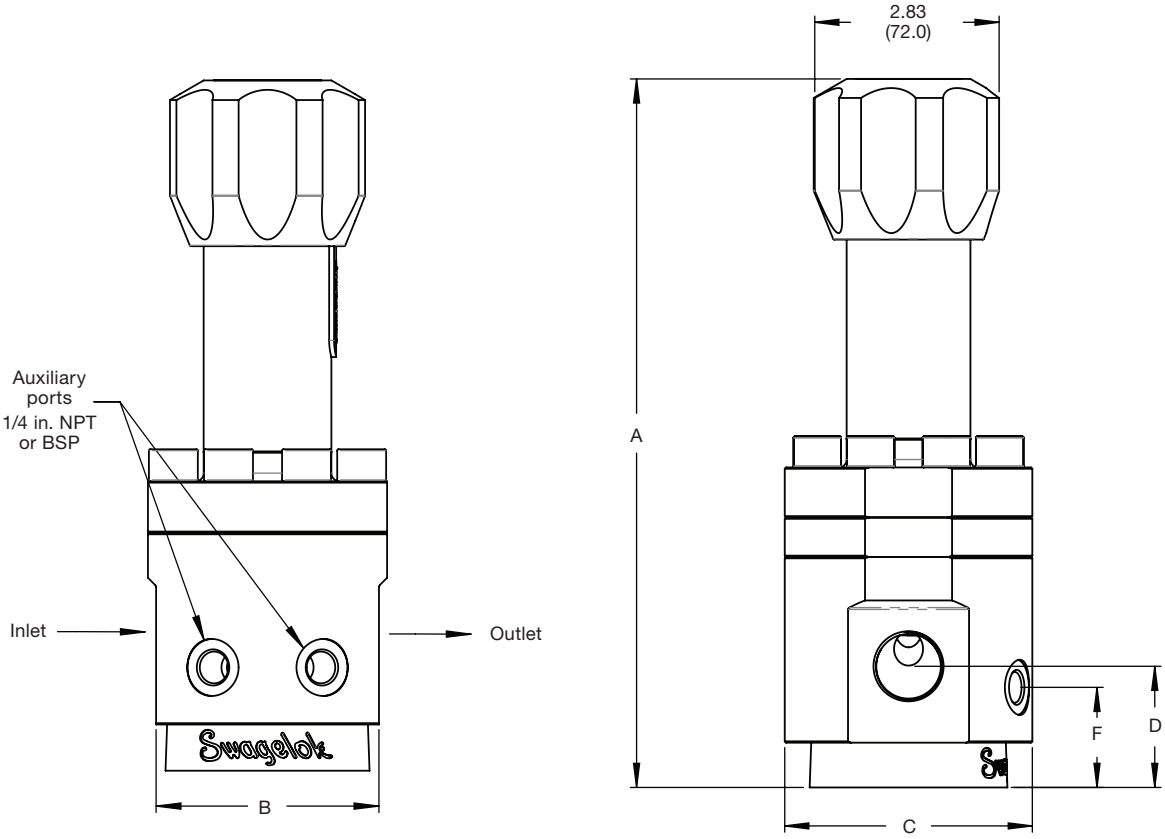

Ordering Information

Build an SGBS series regulator ordering number by combining the designators in the sequence shown below.

Note: Not all options are available for every size of regulator. For more information on the options for each regulator size, see pages 5 to 21.

1	2	3	4	5	6	7	8	9	10	11	12	13	14
SG	B	S	12	1	N	P	N0	D	N	N	A	B	000

1 Type of Regulator
SG = Swagelok general industrial

2 Regulator Function
B = Back pressure

3 Loading Mechanism
S = Spring

4 Body Size
08 = 1/2 in./DN15
12 = 3/4 in./DN20
16 = 1 in./DN25
24 = 1 1/2 in./DN40

5 Body Material
1 = 316L
C = 316L, SC-11 cleaned

6 Control Range
E = 5 to 50 psig (0.3 to 3.4 bar)
F = 10 to 100 psig (0.7 to 6.8 bar)
G = 25 to 250 psig (1.7 to 17.2 bar)
H = 37 to 375 psig (2.6 to 25.8 bar)
J = 50 to 500 psig (3.4 to 34.4 bar)
L = 100 to 1000 psig (6.9 to 68.9 bar)
M = 150 to 1500 psig (10.3 to 103 bar)
N = 200 to 2000 psig (13.7 to 137 bar)
P = 300 to 3000 psig (20.6 to 206 bar)
R = 360 to 3600 psig (24.8 to 248 bar)
W = 600 to 6000 psig (41.3 to 413 bar)①

① Only available on body sizes 08 and 12.

7 Seat Material
E = Elastomer seat①②
P = PEEK seat

① Not available on control ranges M, N, P, R, or W.
② Maximum inlet pressure 1000 psig (68.9 bar).

8 Connection Type
N0 = NPT female
B0 = BSP (ISO 228) Female
FA = ASME RF flange, class 150
FB = ASME RF flange, class 300
FC = ASME RF flange, class 600
FE = ASME RF flange, class 1500
FF = ASME RF flange, class 2500
GB = ASME RTJ flange, class 300
GC = ASME RTJ flange, class 600
GE = ASME RTJ flange, class 1500
GF = ASME RTJ flange, class 2500
DN = EN (DIN) RF flange, PN40

Note: Flanges are not available on body size 08 and have control range limitations. Additional connection options are available, see page 11 for details.

9 Port Configuration
A = See page 12
D = See page 12①
G = See page 12①
F = See page 12
M = See page 12①

① Only available on body sizes 08 and 12.

10 Auxiliary Port Connection
0 = No auxiliary ports①②
N = Female NPT pipe threads②③
B = Female ISO/BSP parallel threads

① Only available on port configuration A.
② Only available on body sizes 08 and 12.
③ Only available on connection type N0 and N4.

11 Seal Material
V = FKM
N = Nitrile
E = EPDM
L = Low-temperature nitrile

12 Sensor Options
A = Non-venting

13 Handle Options
B = Knob (blue)
K = Knob (black)
G = Knob (green)
N = Knob (orange)
Y = Knob (yellow)
3 = Antitamper
4 = Antitamper and factory set

14 Additional Options
000 = None
See page 21 for options.

High Sensitivity Back-Pressure, Spring-Loaded Regulators — SHBS Series

Applications

Suitable for a wide variety of industrial applications where manual operation of the regulator is suitable and accurate set pressure control is desired.

Features

- Balanced poppet
- Diaphragm sensing
- Handle actuation

Options

- Antitamper handle
- Factory set and locked handle
- Special cleaning
- NACE MR0175/ISO 15156
- Panel mounting kits sold separately

Technical Data: Elastomer Seat

Body Size	Maximum Inlet Pressure psig (bar)	Maximum Outlet Pressure psig (bar)	Adjustable Pressure Range psig (bar)	Sensing Type psig (bar)	Temperature Range °F (°C)	Flow Coefficient (C_v)	Minimum Weight lb (kg)
08	250 (17.2)	250 (17.2)	1 to 50 (0.07 to 3.4)	Diaphragm: 1 to 50 (0.07 to 3.4)	–49 to 356° (–45 to 180°) See **Pressure-Temperature Ratings**, page 14	1.95	16.5 (7.5)
12						2.3	17.6 (8.0)
16						4.8	26.5 (12.0)
24						10.7	30.4 (13.8)

Materials of Construction

Component		Material / Specification
Common Components	**1** Spring housing	316L SS / A479
	2 Slot cover	Nylon
	3 Stem	316L SS / A479
	4 Upper spring button	
	5 Set spring	51CrV4 / EN 10089 or ASTM A401
	6 Cap screw	304 SS / A193
	7 Lower spring button	316L SS / A479
	8 *Body*	
	9 *Poppet*	
	10 *Seat*	*316L SS / A479 or PEEK*
	11 *Poppet spring*	*Elgiloy*
	12 *O-rings*	*EPDM, FKM, or nitrile*
	13 *Backup rings*	*PTFE*
	14 *Body plug*	*316L SS / A479*
Actuation	***15*** Knob	Nylon
	16 Knob cover	Plastic
	17 Disc spring	316 SS
	18 Washer	
	19 Circlip	
	20 Screw	304 SS / A193
	21 A/T upper	316L SS / A479
	22 A/T inner	
	23 A/T outer	
Sensing Mechanism	**Diaphragm Only**	
	24 Diaphragm nut	*304 SS / A193*
	25 *Diaphragm*	*EPDM, FKM, or nitrile*
	26 Upper diaphragm plate	*316L SS / A479*
	27 *Lower diaphragm plate*	
	28 *Diaphragm screw*	

Nonwetted lubricant: hydrocarbon-based.

Wetted lubricant: PTFE-based.

Wetted components listed in *italics*.

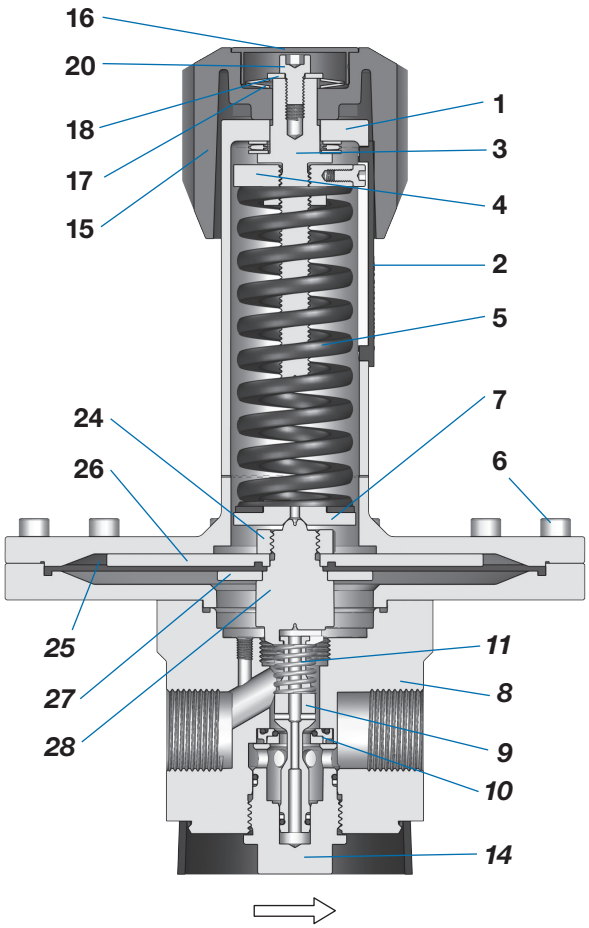

Flow Curves — SHBS Series

The graphs below illustrate the change or "accumulation" in inlet pressures as the flow rate increases. For more flow curve information, contact your authorized Swagelok sales and service center or visit swagelok.com to generate your own flow curves.

Note: Elastomer and PEEK curves are very similar and may be plotted over each other.

SHBS12

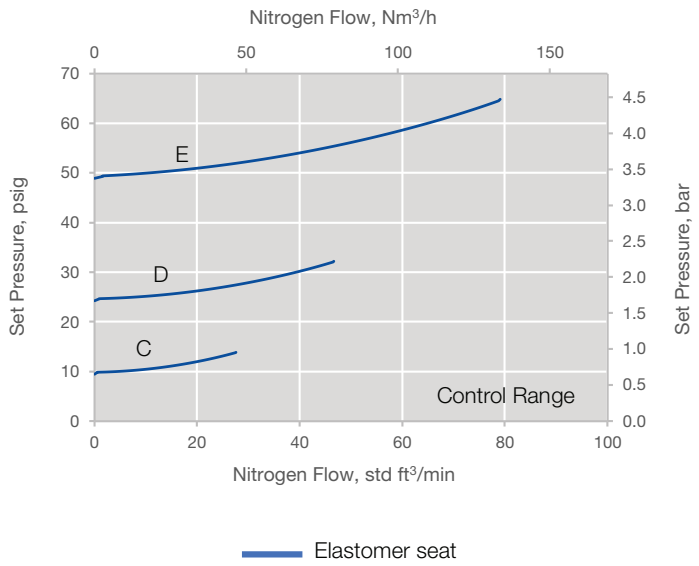

SHBS16

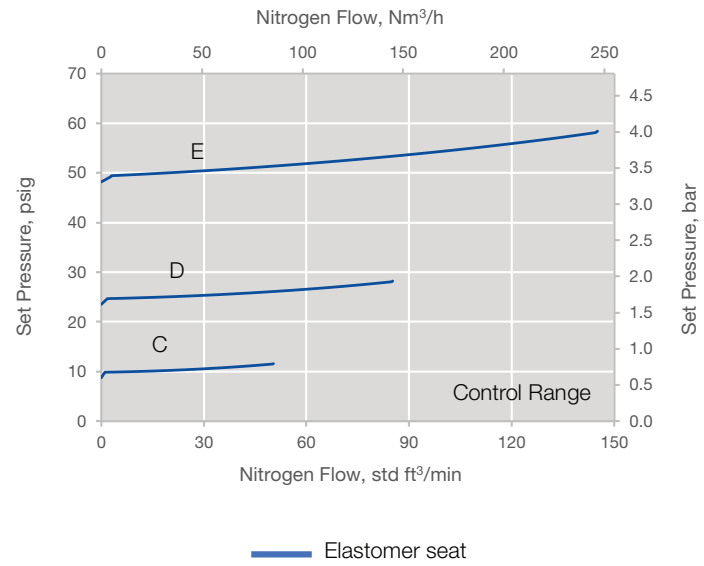

SHBS24

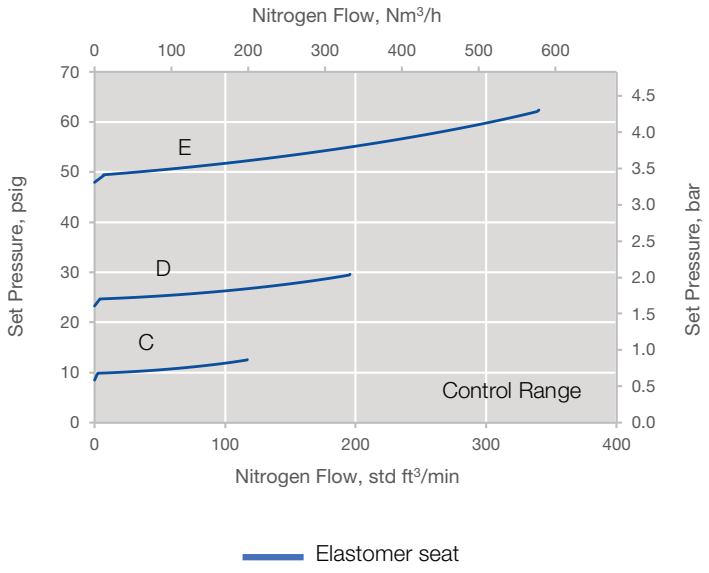

SHBS Dimensions

Dimensions, in inches (millimeters), are for reference only and are subject to change. Dimensions based on a threaded connection. See cad.swagelok.com for detailed CAD information of your product.

Body Size	**Dimensions**, in. (mm)				
	A	**B**	**C**	**D**	**F**
08	10.4 (264)	2.91 (74)	3.12 (80)	1.81 (46)	1.50 (38)
12	10.4 (264)	3.23 (82)	3.70 (94)	1.81 (46)	1.50 (38)
16	11.6 (293)	4.53 (115)	4.33 (110)	2.05 (52)	1.77 (45)
24	12.1 (308)	4.53 (115)	4.33 (110)	2.32 (59)	2.36 (60)

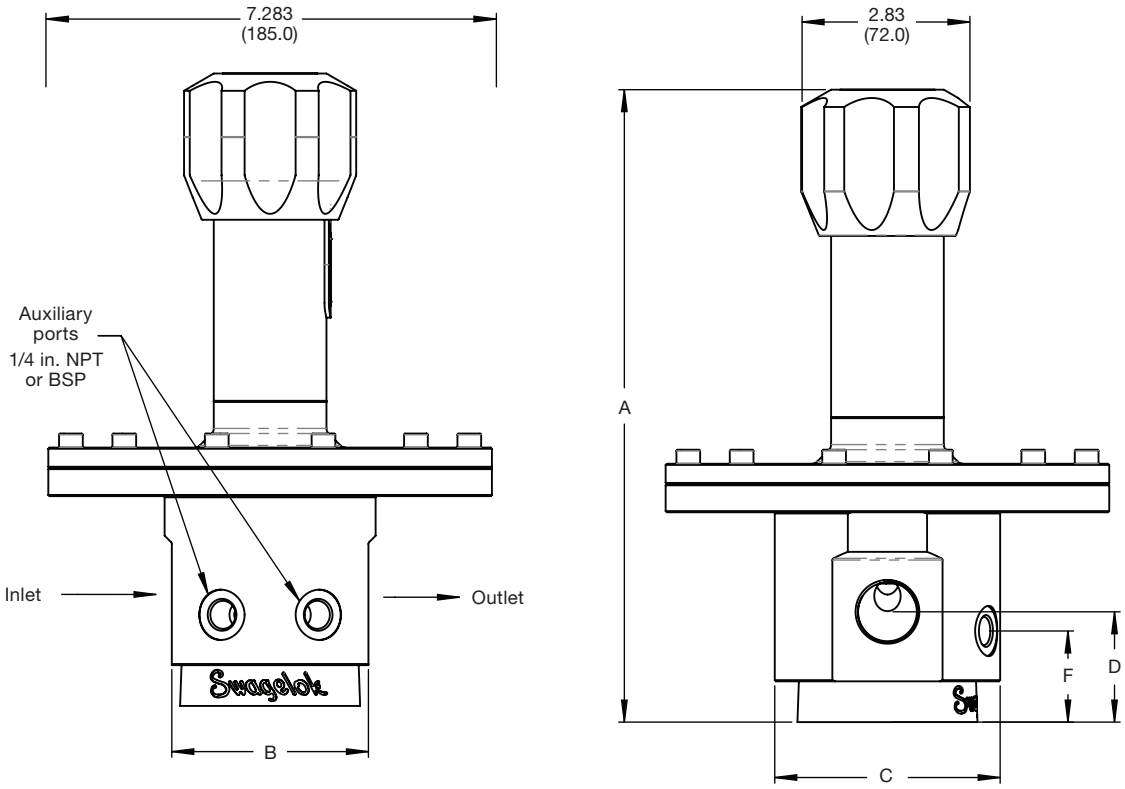

Ordering Information

Build an SHBS series regulator ordering number by combining the designators in the sequence shown below.

Note: Not all options are available for every size of regulator. For more information on the options for each regulator size, see pages 5 to 21.

1	2	3	4	5	6	7	8	9	10	11	12	13	14
SH	B	S	08	C	D	E	B0	A	0	N	A	3	000

1 Type of Regulator
SH = Swagelok high sensitivity

2 Regulator Function
B = Back pressure

3 Loading Mechanism
S = Spring

4 Body Size
08 = 1/2 in./DN15
12 = 3/4 in./DN20
16 = 1 in./DN25
24 = 1 1/2 in./DN40

5 Body Material
1 = 316L
C = 316L, SC-11 cleaned

6 Control Range
C = 1 to 10 psig (0.07 to 0.68 bar)
D = 2.5 to 25 psig (0.2 to 1.7 bar)
E = 5 to 50 psig (0.3 to 3.4 bar)

7 Seat Material
E = Elastomer seat, 250 psig (17.2 bar)

8 Connection Type
N0 = NPT female
B0 = BSP (ISO 228) female
FA = ASME RF flange, class 150
DN = EN (DIN) RF flange, PN40

Note: Flanges are not available on body size 08 and have control range limitations. Additional connection options are available, see page 11 for details.

9 PortConfiguration
A = See page 12
D = See page 12①
G = See page 12①
F = See page 12
M = See page 12①

① Only available on body sizes 08 and 12.

10 Auxiliary Port Connection
0 = No auxiliary ports①②
N = Female NPT pipe threads②③
B = Female ISO/BSP parallel threads

① Only available on port configuration A.
② Only available on body sizes 08 and 12.
③ Only available on connection type N0 and N4.

11 Seal Material
V = FKM
N = Nitrile
E = EPDM
L = Low-temperature nitrile

12 Sensor Options
A = Non-venting

13 Handle Options
B = Knob (blue)
K = Knob (black)
G = Knob (green)
N = Knob (orange)
Y = Knob (yellow)
3 = Antitamper
4 = Antitamper and factory set

14 Additional Options
000 = None

See page 21 for options.

General Industrial Back-Pressure, Dome-Loaded Regulators — SGBD Series

Applications

Suitable for a wide variety of industrial applications where manual operation of the regulator is suitable.

Features

- Balanced poppet
- Diaphragm sensing
- Non-venting
- Pilot regulator control

Options

- Differential pressure pilot
- Antitamper pilot handle
- Factory set pilot handle
- Special cleaning
- NACE MR0175/ISO 15156

Technical Data: PEEK Seat

Body Size	Maximum Inlet Pressure psig (bar)	Maximum Outlet Pressure psig (bar)	Adjustable Pressure Range psig (bar)	Sensing Type psig (bar)	Temperature Range °F (°C)	Flow Coefficient (C_V)	Minimum Weight lb (kg)
12	6000 (413)	6000 (413)	5 to 4000 (0.3 to 275)	Diaphragm: 5 to 4000 (0.3 to 275)	–40 to 356°F (–40 to 180°C) See **Pressure-Temperature Ratings**, page 14	2.3	9.7 (4.4)
16						4.8	26.5 (12.0)
24						10.7	27.6 (12.5)

Technical Data: Elastomer Seat

Body Size	Maximum Inlet Pressure psig (bar)	Maximum Outlet Pressure psig (bar)	Adjustable Pressure Range psig (bar)	Sensing Type psig (bar)	Temperature Range °F (°C)	Flow Coefficient (C_V)	Minimum Weight lb (kg)
12	1000 (68.9)	1000 (68.9)	5 to 1000 (0.3 to 68.9)	Diaphragm: 5 to 1000 (0.3 to 68.9)	–49 to 356°F (–45 to 180°C) See **Pressure-Temperature Ratings**, page 14	2.3	9.7 (4.4)
16						4.8	26.5 (12.0)
24						10.7	27.6 (12.5)

Materials of Construction

Component		Material / Specification
Common Components	***1*** *Dome*	*316L SS / A479*
	2 Cap screw	304 SS / A193
	3 *Body*	*316L SS / A479*
	4 *Poppet*	
	5 *Seat*	*316L SS / A479 or PEEK*
	6 *Poppet spring*	*Elgiloy*
	7 *O-rings*	*EPDM, FKM, or nitrile*
	8 *Backup rings*	*PTFE*
	9 *Body plug*	*316L SS / A479*
Sensing Mechanism	**Diaphragm Only**	
	10 *Diaphragm nut*	*304 SS / A193*
	11 *Diaphragm*	*EPDM, FKM, or nitrile*
	12 *Upper diaphragm plate*	*316L SS / A479*
	13 *Lower diaphragm plate*	
	14 *Diaphragm screw*	
	15 *Dome spring*	

Nonwetted lubricant: hydrocarbon-based.

Wetted lubricant: PTFE-based.

Wetted components listed in *italics*.

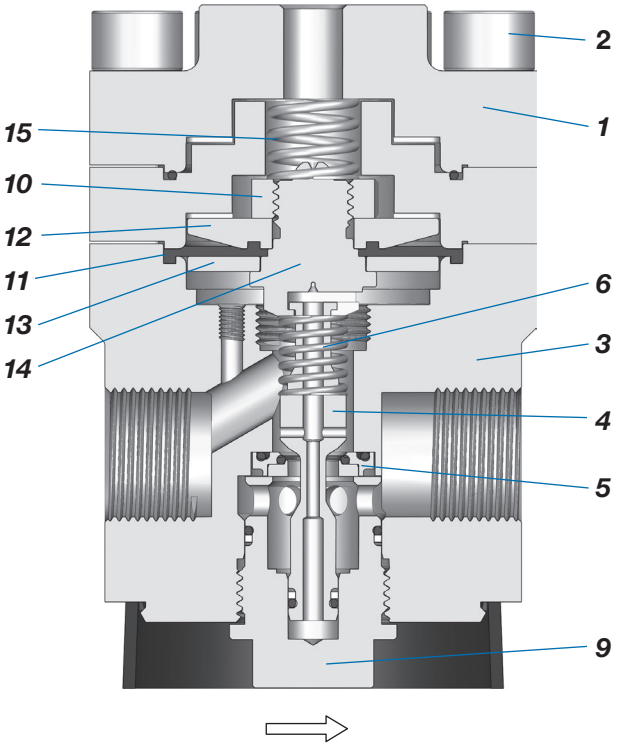

Flow Curves — SGBD Series

The graphs below illustrate the change or “accumulation” in inlet pressures as the flow rate increases. For more flow curve information, contact your authorized Swagelok sales and service center or visit swagelok.com to generate your own flow curves.

Note: Elastomer and PEEK curves are very similar and may be plotted over each other.

SGBD12

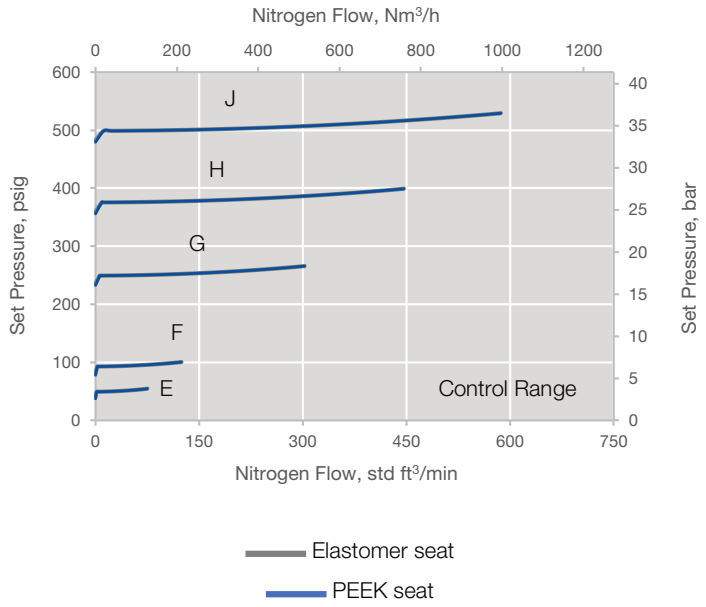

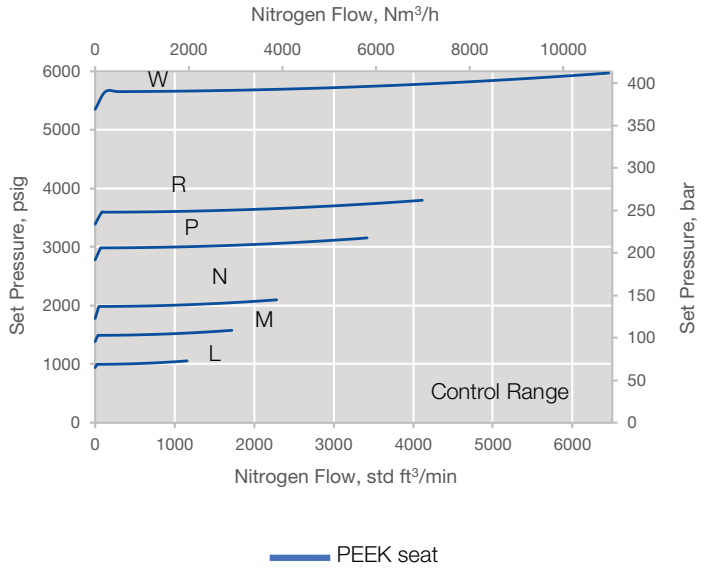

SGBD16

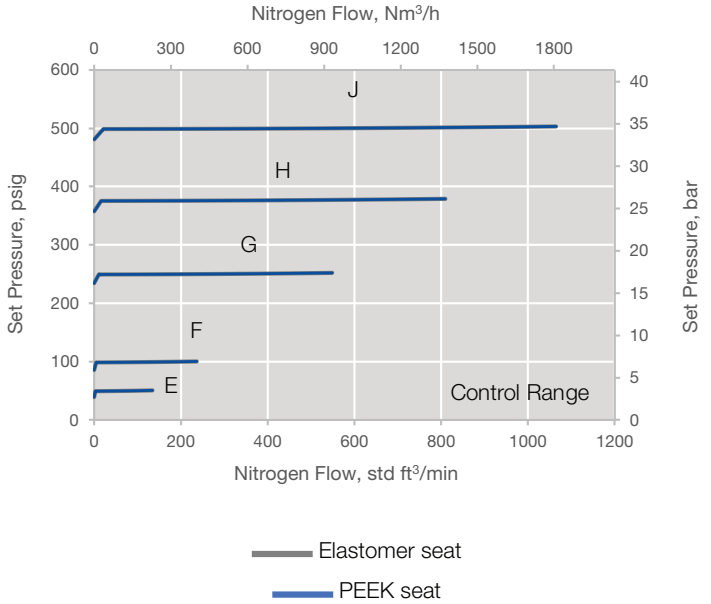

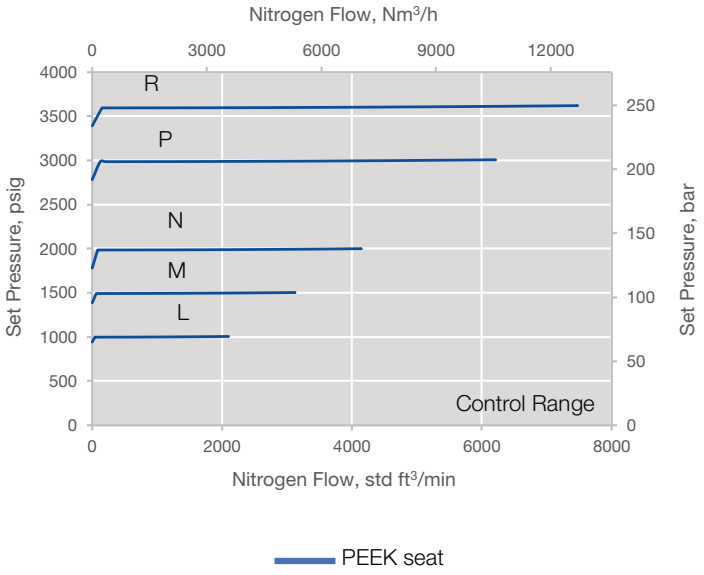

Flow Curves — SGBD Series

The graphs below illustrate the change or "accumulation" in inlet pressures as the flow rate increases. For more flow curve information, contact your authorized Swagelok sales and service center or visit swagelok.com to generate your own flow curves.

SGBD24

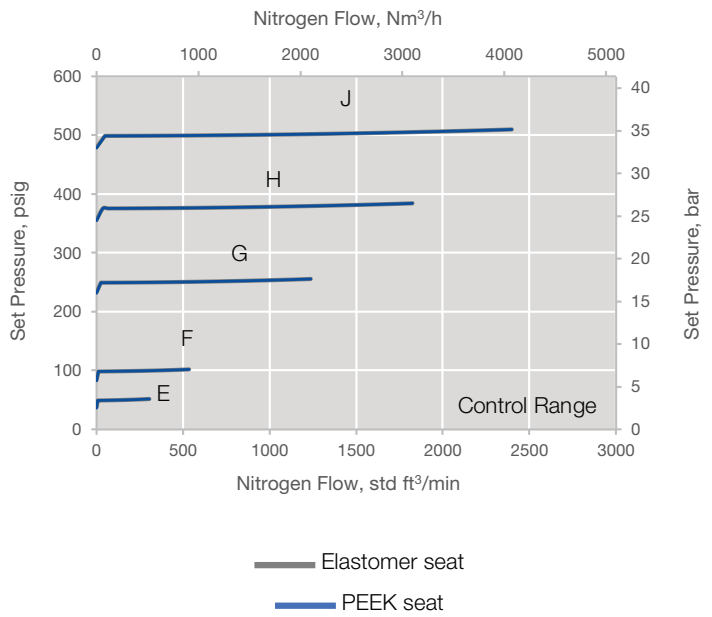

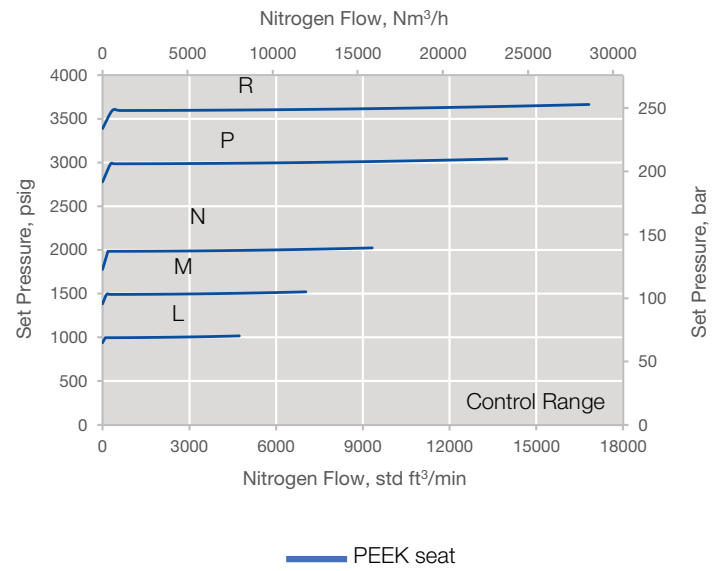

SGBD Dimensions

Dimensions, in inches (millimeters), are for reference only and are subject to change. Dimensions based on a threaded connection. See cad.swagelok.com for detailed CAD information of your product.

Body Size	**Dimensions**, in. (mm)				
	A	**B**	**C**	**D**	**F**
12	5.32 (135)	3.23 (82)	3.70 (94)	1.81 (46)	1.50 (38)
16	6.85 (174)	4.53 (115)	4.33 (110)	2.05 (52)	1.77 (45)
24	7.44 (189)	4.53 (115)	4.33 (110)	2.32 (59)	2.36 (60)

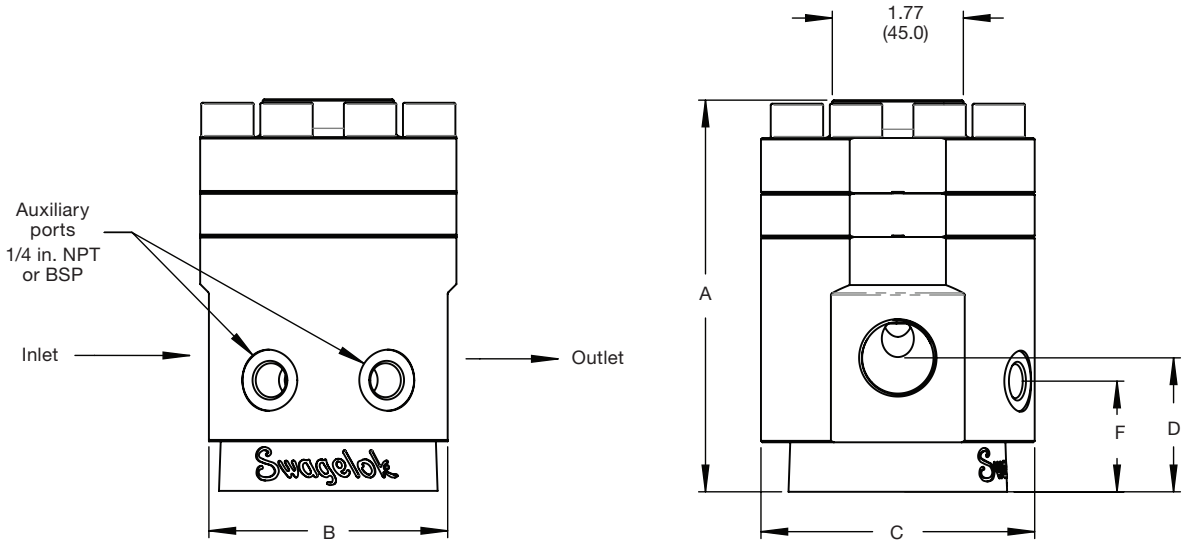

Ordering Information

Build an SGBD series regulator ordering number by combining the designators in the sequence shown below.

Note: Not all options are available for every size of regulator. For more information on the options for each regulator size, see pages 5 to 21.

1	2	3	4	5	6	7	8	9	10	11	12	13	14
SG	B	D	12	1	G	E	B0	F	B	V	D	B	000

1 Type of Regulator
SG = Swagelok general industrial

2 Regulator Function
B = Back pressure

3 Loading Mechanism
D = Dome

4 Body Size
12 = 3/4 in./DN20
16 = 1 in./DN25
24 = 1 1/2 in./DN40

5 Body Material
1 = 316L
C = 316L, SC-11 cleaned

6 Control Range
0 = No pilot: 4000 psig (275 bar) max
C = 1 to 10 psig (0.07 to 0.68 bar)
D = 2.5 to 25 psig (0.2 to 1.7 bar)
E = 5 to 50 psig (0.3 to 3.4 bar)
F = 10 to 100 psig (0.7 to 6.8 bar)
G = 25 to 250 psig (1.7 to 17.2 bar)
J = 50 to 500 psig (3.4 to 34.4 bar)
L = 100 to 1000 psig (6.9 to 68.9 bar)
N = 200 to 2000 psig (13.7 to 137 bar)
P = 300 to 3000 psig (20.6 to 206 bar)
S = 400 to 4000 psig (27.5 to 275 bar)

7 Seat Material
E = Elastomer seat①②
P = PEEK seat

① Not available on control ranges N, P, or S.
② Maximum inlet pressure 1000 psig (68.9 bar).

8 Connection Type
N0 = NPT female
B0 = BSP (ISO 228) Female
FA = ASME RF flange, class 150
FB = ASME RF flange, class 300
FC = ASME RF flange, class 600
FE = ASME RF flange, class 1500
FF = ASME RF flange, class 2500
GB = ASME RTJ flange, class 300
GC = ASME RTJ flange, class 600
GE = ASME RTJ flange, class 1500
GF = ASME RTJ flange, class 2500
DN = EN (DIN) RF Flange, PN40

Note: Flanges have control range limitations. Additional connection options are available, see page 11 for details.

9 Port Configuration
A = See page 12①
D = See page 12①②
G = See page 12①②
F = See page 12
M = See page 12①②

① Only available on control range 0.
② Only available on body size 12.

10 Auxiliary Port Connection
N = Female NPT pipe threads①②③
B = Female ISO/BSP parallel threads

① Only available on control range 0.
② Only available on body size 12.
③ Only available on connection type N0 and N4.

11 Seal Material
V = FKM
N = Nitrile
E = EPDM
L = Low-temperature nitrile

12 Sensor Options
A = No pilot①
D = Standard pilot②
F = Differential pressure pilot③

① Exclusively for control range 0.
② Only available on control ranges E, F, G, J, L, N, P, and S.
③ Only available on control ranges C, D, E, F, G, and J.

13 Handle Options
0 = Not applicable (no pilot)①
B = Knob (blue)
K = Knob (black)
G = Knob (green)
N = Knob (orange)
Y = Knob (yellow)
3 = Antitamper
4 = Antitamper and factory set

① Exclusively for control range 0.

14 Additional Options
000 = None

See page 21 for options.

General Industrial Back-Pressure, Ratio Regulators — SGBA Series

Applications

Suitable for a wide variety of industrial applications where remote operation of the regulator is suitable.

Features

- Balanced poppet
- Ratio sensing
- Non-venting
- Air-loaded pressure control with a choice of dome-to-set pressure ratios

Options

- Special cleaning
- NACE MR0175/ISO 15156

Technical Data: PEEK Seat

Body Size	Maximum Inlet Pressure psig (bar)	Maximum Outlet Pressure psig (bar)	Maximum Dome Pressure psig (bar)	Adjustable Pressure Range psig (bar)	Sensing Type psig (bar)	Temperature Range °F (°C)	Flow Coefficient (C_v)	Minimum Weight lb (kg)
08	6000 (413)	6000 (413)	250 (17.2)	5 to 6000 (0.3 to 413)	Ratio: 5:1 (Diaphragm) Ratio: 15:1, 40:1, 70:1 (Piston)	–40 to 356° (–40 to 180°) See **Pressure-Temperature Ratings**, page 14	1.95	19.2 (8.7)
12							2.3	20.3 (9.2)

Technical Data: Elastomer Seat

Body Size	Maximum Inlet Pressure psig (bar)	Maximum Outlet Pressure psig (bar)	Maximum Dome Pressure psig (bar)	Adjustable Pressure Range psig (bar)	Sensing Type psig (bar)	Temperature Range °F (°C)	Flow Coefficient (C_v)	Minimum Weight lb (kg)
08	1000 (68.9)	1000 (68.9)	250 (17.2)	5 to 1000 (0.3 to 68.9)	Ratio: 5:1 (Diaphragm) Ratio: 15:1, 40:1, 70:1 (Piston)	–49 to 356° (–45 to 180°) See **Pressure-Temperature Ratings**, page 14	1.95	19.2 (8.7)
12							2.3	20.3 (9.2)

Materials of Construction

Component		Material / Specification
Common Components	**1** *Dome*	316L SS / A479
	2 Dish	
	3 *Cap screw*	*304 SS / A193*
	4 *Body*	*316L SS / A479*
	5 *Poppet*	
	6 *Seat*	*316L SS / A479 or PEEK*
	7 *Poppet spring*	*Elgiloy*
	8 *O-rings*	*EPDM, FKM, or nitrile*
	9 *Backup rings*	*PTFE*
	10 *Body plug*	*316L SS / A479*
Sensing Mechanism	**Diaphragm Only**	
	11 *Diaphragm nut*	*304 SS / A193*
	12 *Diaphragm*	*EPDM, FKM, or nitrile*
	13 *Upper diaphragm plate*	*316L SS / A479*
	14 *Lower diaphragm plate*	
	15 *Diaphragm screw*	
	Piston Only	
	16 *Piston*	*316L SS / A479*
	17 *Piston plate*	

Nonwetted lubricant: hydrocarbon-based.
Wetted lubricant: PTFE-based.
Wetted components listed in *italics*.

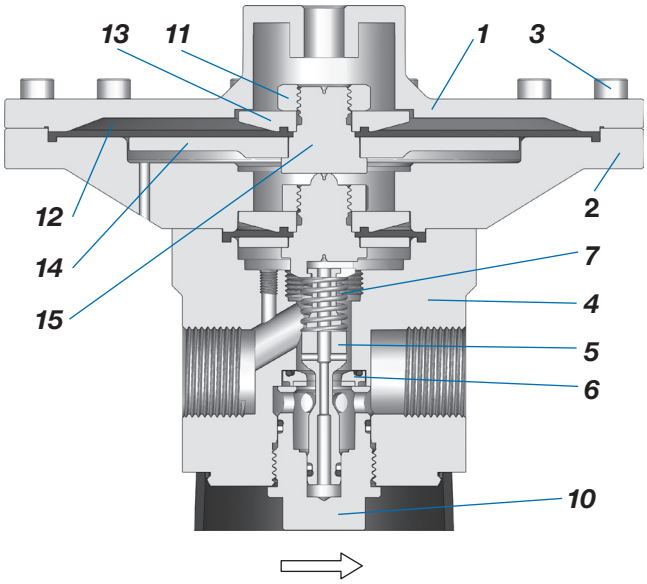

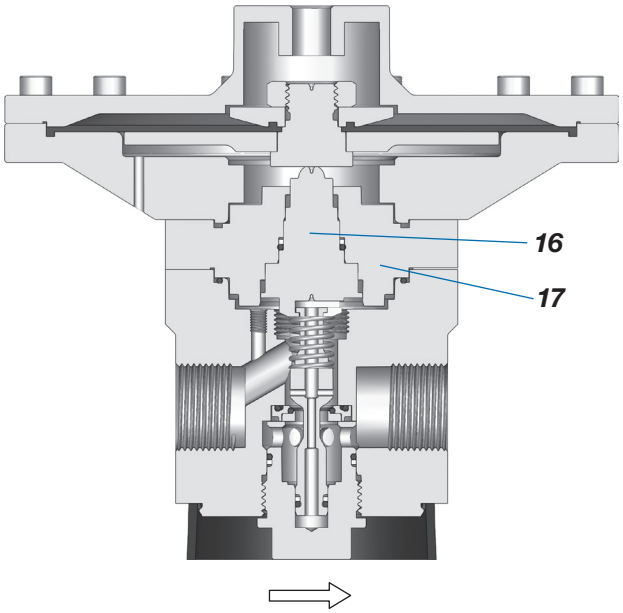

Flow Curves — SGBA Series

The graphs below illustrate the change or "accumulation" in inlet pressures as the flow rate increases. For more flow curve information, contact your authorized Swagelok sales and service center or visit swagelok.com to generate your own flow curves.

Note: Elastomer and PEEK curves are very similar and may be plotted over each other.

SGBA12

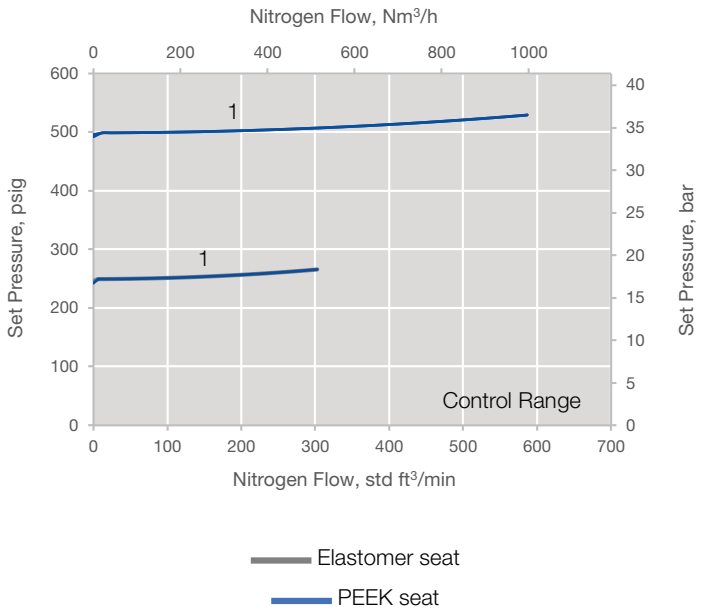

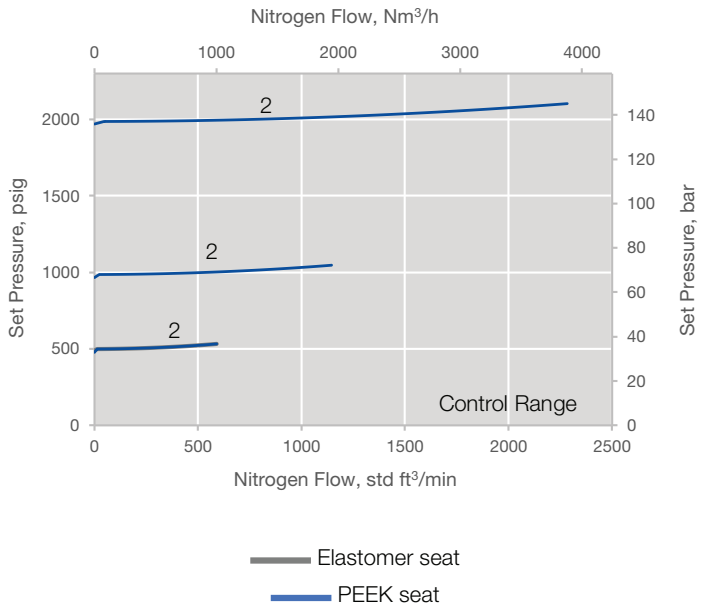

SGBA12

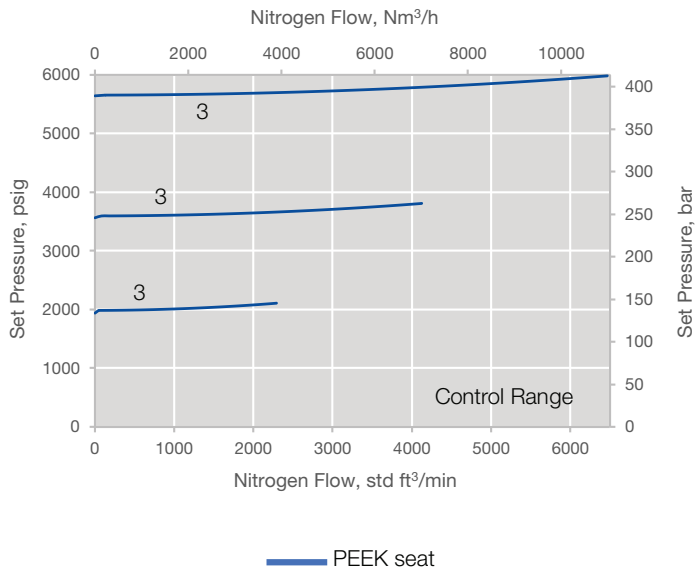

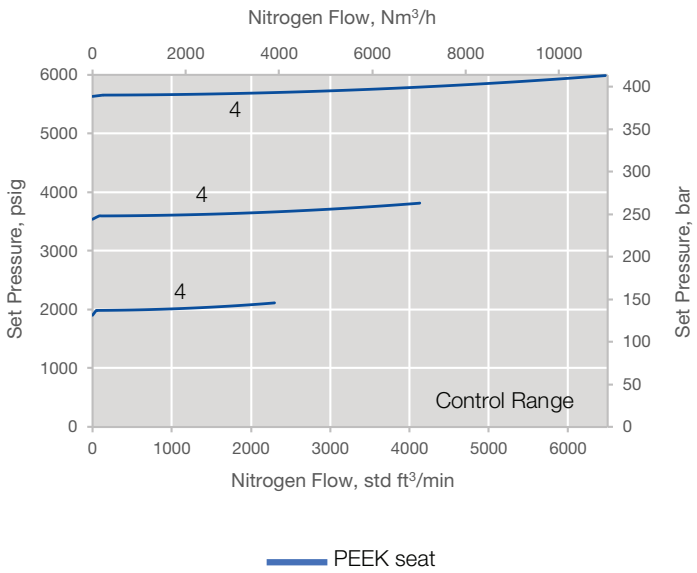

Dimensions

Dimensions, in inches (millimeters), are for reference only and are subject to change. Dimensions based on a threaded connection. See cad.swagelok.com for detailed CAD information of your product.

Body Size	**Dimensions**, in. (mm)				
	A	B	C	D	F
08	6.00 (153)①	2.91 (74)	3.12 (80)	1.81 (46)	1.50 (38)
12	6.00 (153)①	3.23 (82)	3.70 (94)	1.81 (46)	1.50 (38)

① Based on a diaphragm sensing unit, dimension will increase by 15 mm for piston sensing.

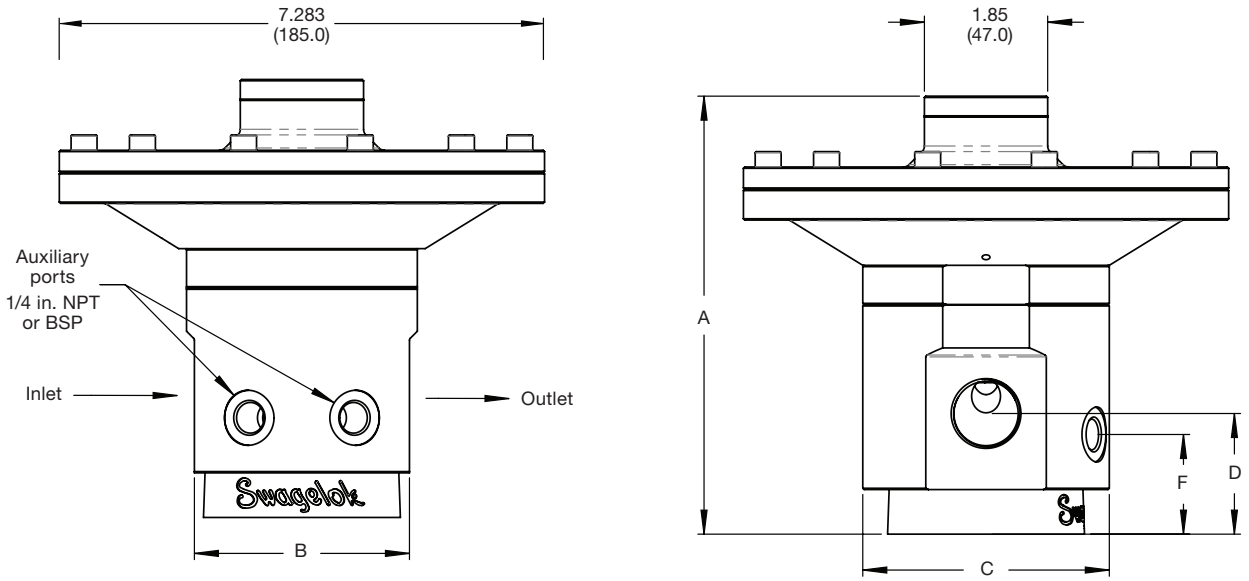

Ordering Information

Build an SGBA series regulator ordering number by combining the designators in the sequence shown below.

Note: Not all options are available for every size of regulator. For more information on the options for each regulator size, see pages 5 to 21.

1	2	3	4	5	6	7	8	9	10	11	12	13	14
SG	B	A	08	1	3	P	N0	A	N	N	A	0	000

1 Type of Regulator
SG = Swagelok general industrial

2 Regulator Function
B = Back pressure

3 Loading Mechanism
A = Ratio

4 Body Size
08 = 1/2 in./DN15
12 = 3/4 in./DN20

5 Body Material
1 = 316L
C = 316L, SC-11 cleaned

6 Dome-to-outlet ratio
1 = 1:5①
2 = 1:15②
3 = 1:40
4 = 1:70

① Control range is limited to 1250 psig (86 bar) with a maximum dome pressure of 250 psig (17.2 bar).

② Control range is limited to 3750 psig (258 bar) with a maximum dome pressure of 250 psig (17.2 bar).

7 Seat Material
E = Elastomer seat①
P = PEEK seat

① Maximum inlet pressure 1000 psig (68.9 bar).

8 Connection Type
N0 = NPT female
B0 = BSP (ISO 228) Female
FA = ASME RF flange, class 150
FB = ASME RF flange, class 300
FC = ASME RF flange, class 600
FE = ASME RF flange, class 1500
FF = ASME RF flange, class 2500
GB = ASME RTJ flange, class 300
GC = ASME RTJ flange, class 600
GE = ASME RTJ flange, class 1500
GF = ASME RTJ flange, class 2500
DN = EN (DIN) RF flange, PN40

Note: Flanges are not available on body size 08 and have control range limitations. See page 11 for details and additional flange options.

9 Port Configuration
A = See page 12
D = See page 12
F = See page 12
G = See page 12
M = See page 12

10 Auxiliary Port Connection
N = Female NPT pipe threads①
B = Female ISO/BSP parallel threads

① Only available on connection type N0 and N4.

11 Seal Material
V = FKM
N = Nitrile
E = EPDM
L = Low-temperature nitrile

12 Sensor Options
A = Non-venting

13 Handle Options
0 = Not applicable

14 Additional Options
000 = None
See page 21 for options.

Electronic Pressure Controller (SEPC)

Applications

Suitable for a wide variety of industrial applications where electronic operation of the regulator is suitable. The SEPC can be paired with many dome or ratio loaded regulators.

Features

- PID control unit using 4-20mA signal

Options

- ATEX and IECEx certified
- North American HAZLOC certified

Technical Data

Housing	Maximum Inlet Pressure psig (bar)	Maximum Outlet Pressure psig (bar)	Adjustable Pressure Range psig (bar)	Sensing Type	Ambient Temperature Range °F (°C)	Flow Coefficient (C_V)	Minimum Weight lb (kg)
Flameproof	250 (17.2)	250 (17.2)	0 to 250 (0 to 17.2)	External Transducer	–4 to 140 (–20 to 60)	0.002	9.7 (4.4)

Electrical

Power Requirement

- 24VDC, 300mA max, 80mA nominal

Turn-on Time

- <1 sec

Command signal

- 4-20mA

Control Supply

Media

- Clean, dry inert gas or air

Pressure

- 250 psig (17.2 bar) Max

Performance

Total setpoint accuracy when installed on a regulator

- SHRD: ±0.25% FS
- SGRD: ±0.50% FS
- SGBD: ±0.50% F
- SGRA: ±0.50% FS
- SGBA: ±0.50% FS
- SFRA: ±1.00% FS

Response Time

- Sensor update rate: 100 milliseconds

Transducer Ratings

Operating Pressure

- Range G: 250psi (17.2bar)
- Range M: 1500psi (103bar)
- Range W: 5800psi (400bar)
- Range Y: 14,500psi (1000bar)

Connections

Control Inlet and Vent

- 1/8 in. NPT Female

Control Outlet

- 3/4 in. Swagelok tube stub and 1/8 in. NPT female

Pressure Transducer

- 1/4 in. NPT Female

Electrical Entry

- 3/4 in. NPT Female

Environment

Ambient Temperature

- -4 to 140°F (-20 to 60°C)

Process Media

- –40 to 185°F (–40 to 85°C)

Relative Humidity

- 90% non-condensing inside enclosure

Ingress Protection

- IEC-60529 IP66

North American Class-Division

- Class I Division 1 Groups B, C, D T4

North American Zone (USA)

- Class I Zone 1 AEx db IIC T4 Gb

North American Zone (Canada)

- Ex db IIC T4 Gb

ATEX (Europe)

- II 2 G Ex db IIC T4 Gb

IECEx (International)

- Ex db IIC T4 Gb

SEPC Dimensions: Flameproof housing

Dimensions, in inches (millimetres), are for reference only and are subject to change. See cad.swagelok.com for details CAD information of your product.

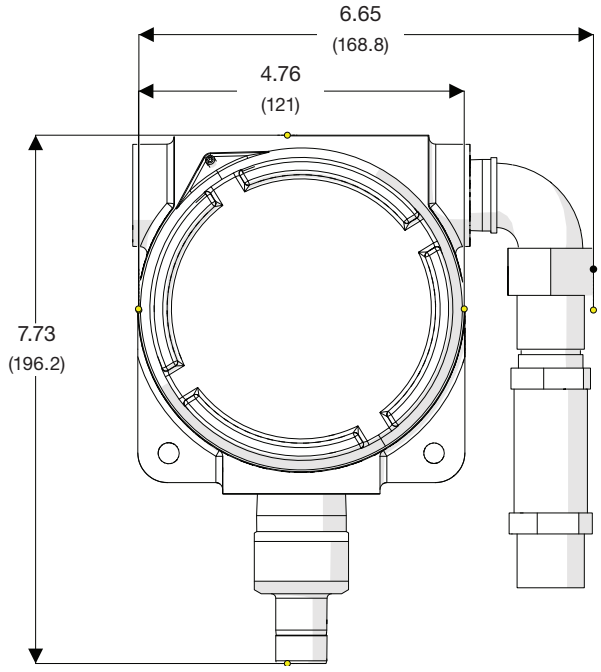

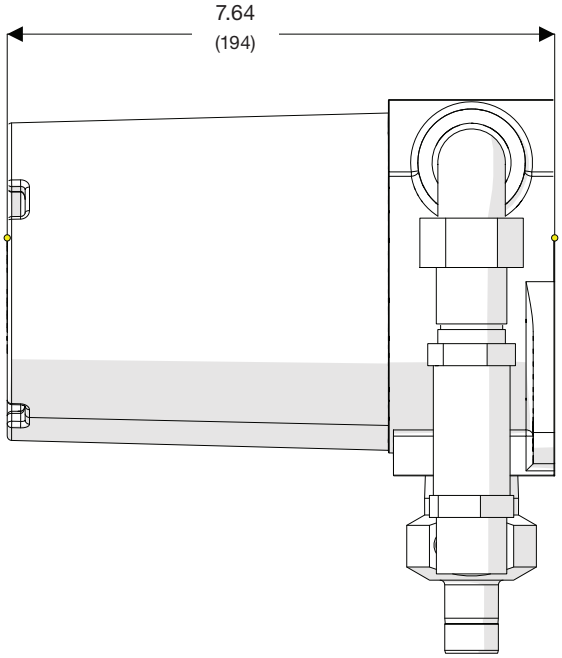

Materials of Construction: Flameproof Housing

Component	Material / Specification
1 Housing	Aluminium
2 Mounting plate	Nylon
3 Drive circuit	Copper, GRP
4 Mounting screws	304 SS
5 Control valves	ENP brass, nickel alloy, stainless steel, ENP steel
6 Upper manifold	316L SS / A479
7 Manifold seat	FKM
8 Flame suppression filter	Bronze
9 Lower manifold	316L SS, A479
10 Inlet filter	PTFE, 316 SS
11 Conduit elbow	Aluminium
12 Connection block	Plastic / brass / stainless steel
13 PID bracket	304 SS
14 PID controller	PCB
15 Earth bonding block	Brass
16 Outlet transducer	Stainless steel, Elgiloy

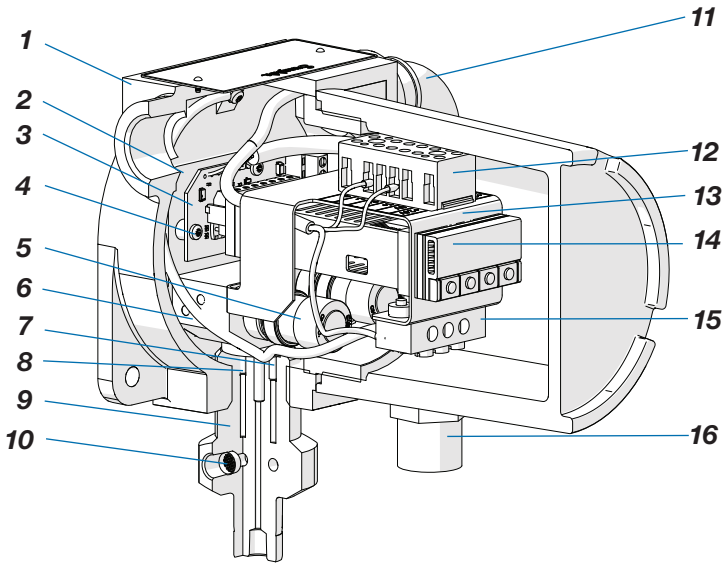

Ordering Information

Build an SEPC series controller ordering number by combining the designators in the sequence shown below.
Note: SEPC's can be installed onto a regulator by the factory, see SGRE, SGBE, and SFRA products for details.

1	2	3	4	5	6	7	8
SEPC	XE	1	Y	N0	V	1	01

1 Type of Controller
SEPC = Swagelok electronic pressure controllerl

2 Housing Grade
XA = Flameproof, CSA and UL
XE = Flameproof, ATEX and IECX

3 Manifold Material
1 = 316L

4 Transducer Range
Y = 0 to 14 500 psig (1 000 bar)

5 Connection Type
N0 = 1/8 in. NPT & 3/4 in. Swagelok tube

6 Seal Material
V = FKM

7 Input Signal
1 = 4 to 20ma

8 PID-Preloading
01 = PID settings tuned for 1000 bar transducer, and 150:1 regulator ratio

SEPC Control Signal

The SEPC is designed to controlled remotely by sending a 4-20ma control signal to the unit. Sending 4 ma to the controller will set the SEPC assembly to 0 psig (0bar). Sending 20ma to the controller will set the SEPC assembly to maximum pressure rating.

- When ordered as a stand alone with a transducer the SEPC will be configured to the maximum transducer pressure rating.
- When ordered installed at the factory the SEPC will be configured and calibrated to the maximum product pressure rating.

If remote operation is not required, the controller can be put into local setpoint mode where you can use the buttons on the controller to set a target pressure.

Panel Mounting

Spring-loaded regulators can be panel mounted using the kit MS-MB-KHP.

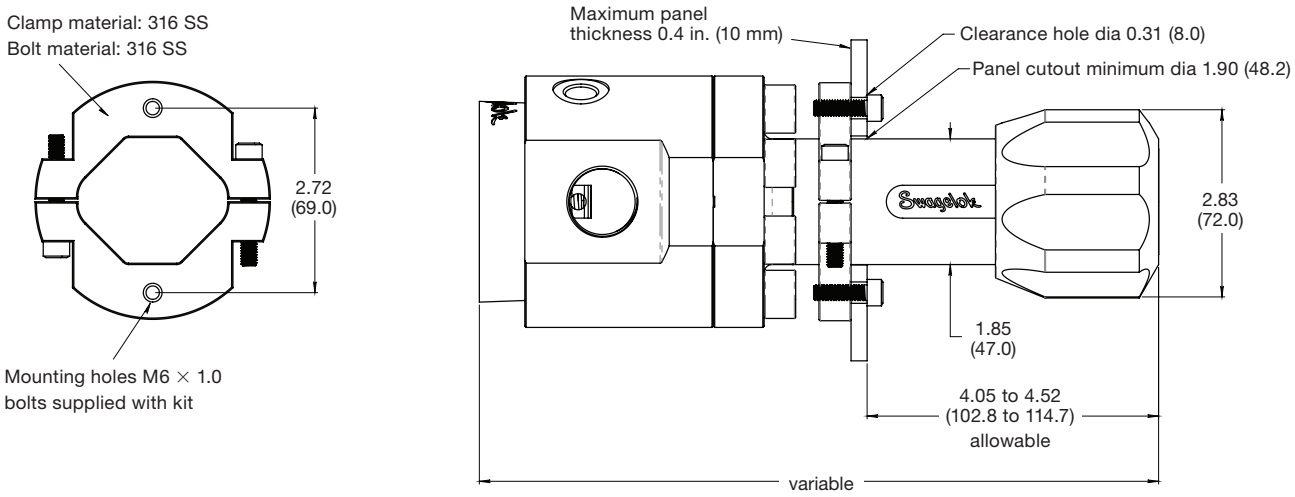

Any size 08, 12, 16, and 24 regulator can be base mounted using the kit MS-MB-PROCESSREG

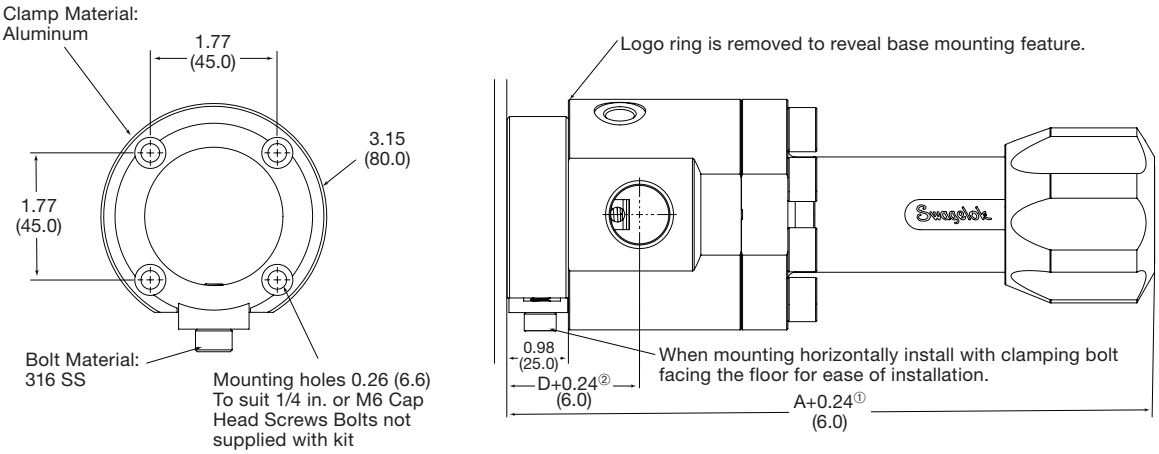

① Refer to the product series dimensions tables for A and D values.

SFRA and SFRS regulators can be mounted using the kit MS-RAMP-BRACKET-KIT

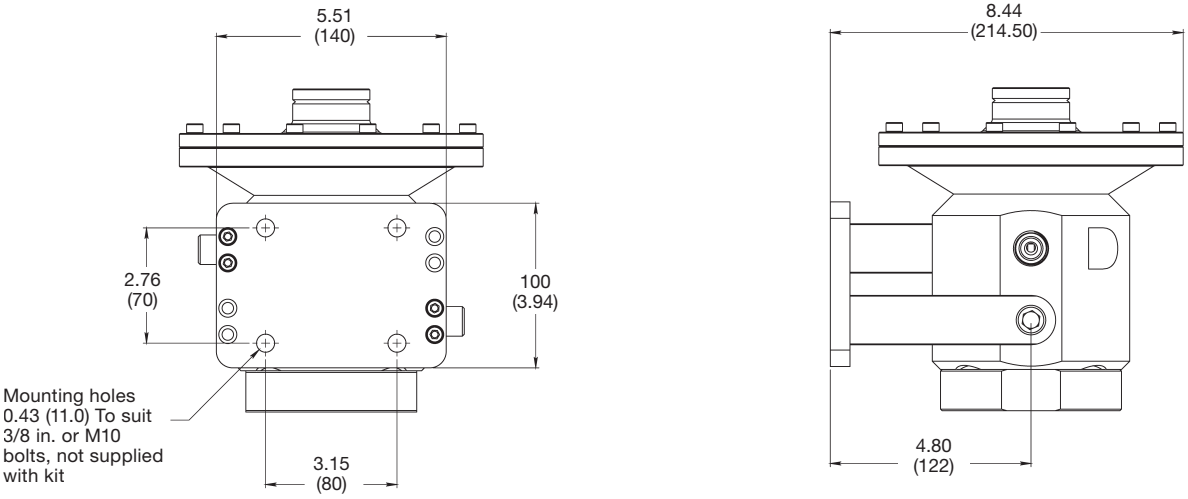

Maintenance Kits

Maintenance kits are available. Replacing regulator components often resolves the cause of the regulator failure.

Regular maintenance of pressure regulator components is an important part of keeping pressure regulators operating successfully. Swagelok offers several maintenance kit options to help keep components and systems performing well. Outlined below are the standard maintenance kit offerings and an example of which parts are included in each kit. For more detailed information of which parts will be included within a kit for a specific regulator model, please reference the appropriate owner's manual or contact your local authorized Swagelok sales and service center.

Seat Kits

The most common cause of pressure creep is due to a damaged seat. Hard polymer seats are susceptible to damage due to debris within the system in which the regulator is fitted.

Body Size	Seat Material PEEK
08	KIT-SEAT-0812-PK
12	
16	KIT-SEAT-16-PK
24	KIT-SEAT-24-PK

Diaphragm Kits

Prolonged heavy cycling or overpressuring of the regulator may cause the diaphragm to fail in time. Diaphragm kits contain a replacement diaphragm. Swagelok offers general and high-sensitivity diaphragm kits.

General Diaphragm Kit

Contains a replacement diaphragm for general industrial regulators.

Body Size	Seal Material			
	V	N	E	L
08	KIT-DIAPH-G0812-V	KIT-DIAPH-G0812-N	KIT-DIAPH-G0812-E	KIT-DIAPH-G0812-L
12				
16	KIT-DIAPH-G1624-V	KIT-DIAPH-G1624-N	KIT-DIAPH-G1624-E	KIT-DIAPH-G1624-L
24				

High-Sensitivity Diaphragm Kit

Contains a replacement diaphragm for high sensitivity and ratio-sensing regulators.

Body Size	Seal Material			
	V	N	E	L
08	KIT-DIAPH-H0824-V	KIT-DIAPH-H0824-N	KIT-DIAPH-H0824-E	KIT-DIAPH-H0824-L
12				
16				
24				

O-Ring Kits

Prolonged, repeated cycling or incompatibility with system media may cause O-ring seals to fail over time. O-ring kits contain all O-rings and backup rings required to service your regulator. The kit contains all seals for every configuration of regulator for the selected body size. Not all seals provided will be required for your particular configuration.

Body Size	Seal Material			
	V	N	E	L
08	KIT-ORING-0812-V	KIT-ORING-0812-N	KIT-ORING-0812-E	KIT-ORING-0812-L
12				
16	KIT-ORING-16-V	KIT-ORING-16-N	KIT-ORING-16-E	KIT-ORING-16-L
24	KIT-ORING-24-V	KIT-ORING-24-N	KIT-ORING-24-E	KIT-ORING-24-L

Handle Kits

Regulators can be ordered with any color handle. Spare handles can also be ordered.

Red	Orange	Yellow	Green	Blue	Black	Antitamper
KIT-HDL-L-RD	KIT-HDL-L-OR	KIT-HDL-L-YL	KIT-HDL-L-GN	KIT-HDL-L-BL	KIT-HDL-L-BK	KIT-HDL-L-AT

Orifice Kits

Compatible with most systems, Swagelok process regulators also have features which allow for tuning that can improve performance and life span. See *Swagelok Process Regulators Pressure Reducing 1/2 in. to 1 1/2 in.* user manual, MS-CRD-0290, for more details.

Ordering number: KIT-ORIFICE-M5

Kit includes a pack of 3 M5 orifices with 0.5 mm, 1.0 mm, and 1.5 mm bore.

Pilot Kits

Pilot regulators that have been fitted to a dome loaded regulator by the factory can be serviced with the below kits. Kits contain seats, Filter, Seals, O-rings, and backup rings to service any pilot regulator. Note, Dual stage pilots may require two kits (one for each stage).

Seat Material			
V	N	E	L
KIT-PILOT-V	KIT-PILOT-N	KIT-PILOT-E	KIT-PILOT-L

Back Pressure Support Ring Kits

Size 16 and 24 back pressure regulators with PEEK seats above and inclusive of pressure range N, have an additional 316 SS support ring installed. These rings can be reused when replacing a seat, but on the offchance a ring is missplaced spares can be ordered.

Body Size	Seat Material
	PEEK
16	KIT-SEAT-16-SUP
24	KIT-SEAT-24-SUP

Custom Maintenance Kits 14

Custom maintenance kits provide specific components for the regulator ordering number selected. This enables the repair, service, and overhaul of a specific regulator as required. Generic size-based kits are also available (see page 89).

To order a custom maintenance kit, replace the last 3 digits of a pressure regulator part number with the required kit number from the table below. (The additional options are described on page 21.) For example, if you want an overhaul kit for regulator SGRS121FEN0A0VAR000, you would order SGRS121FEN0A0VAR-C1.

Custom Maintenance Kits

Designator	Kit Type	Contents
-B1	Service kit	Poppet, seat, O-ring kit, diaphragm (if applicable)
-C1	Overhaul kit	Poppet, seat, O-ring kit, diaphragm or piston assembly, body plug, range spring
-D2	Pilot kit	Replacement pilot regulator

Additional Products

- For additional Swagelok pressure regulators, refer to *Pressure Regulators* catalog, MS-02-230.

- For tank blanketing regulators, refer to *Tank Blanketing Pressure Regulators, RHPS Series* catalog, MS-02-431.

- For Swagelok pressure gauges, refer to *Industrial and Process Pressure Gauges* catalog, MS-02-170.

- For sanitary pressure regulators, refer to *Sanitary Pressure Regulators, RHPS Series* catalog, MS-02-436.

- For Swagelok tube fittings products, refer to *Gaugeable Tube Fittings and Adapter Fittings* catalog, MS-01-140.

⚠ **Process regulators are not "Safety Accessories" as defined in the Pressure Equipment Directive 2014/68/EU.**

⚠ **Do not use the regulator as a shutoff device.**

Safe Product Selection
When selecting a product, the total system design must be considered to ensure safe, trouble-free performance. Function, material compatibility, adequate ratings, proper installation, operation, and maintenance are the responsibilities of the system designer and user.

⚠ **WARNING**
Do not mix/interchange Swagelok products or components not governed by industrial design standards, including Swagelok tube fitting end connections, with those of other manufacturers.

Warranty Information

Swagelok products are backed by The Swagelok Limited Lifetime Warranty. For a copy, visit swagelok.com or contact your authorized Swagelok representative.

Swagelok —TM Swagelok Company
© 2024, 2025 Swagelok Company
MS-02-492, RevD, December 2025