KLF Series Regulators
Maintenance Instructions

Kit Contents

Diaphragm

Poppet spring

Poppet

Poppet damper

Lubricant
MS-LT-WL8

Seat

Seat retainer

Inlet filter

Tools Required

Tool	Size	Component
Vise	-	Body
Socket	11/16 in. or 17 mm	Stem nut, Antitamper nut
	5/8 in. or 16 mm	Seat retainer
Torque wrench	Capable of 236 ft·lb (320 N·m, 32.7 m·kg)	Seat retainer, Cap ring
Swagelok Tools Available		
Large cap ring spanner	2 7/8 in. or 73 mm	Cap ring
Filter insertion tool	—	Inlet filter
Filter pick tool	—	Inlet filter

Symbols

Discard

Lightly lubricate

NOTE: See *Pressure Regulators*, MS-02-230, for tool ordering information.

Exploded View

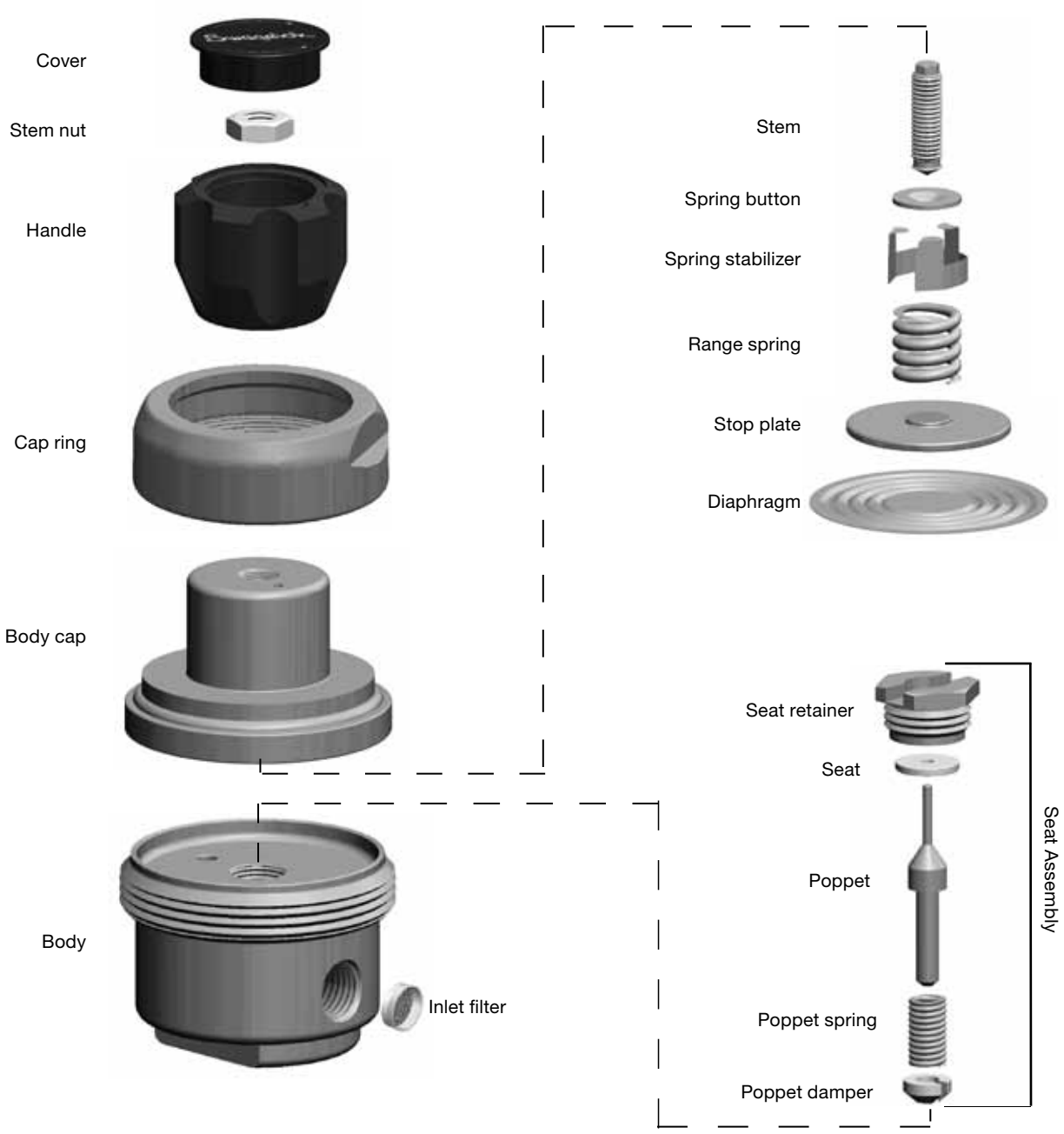

⚠WARNING

Before removing a regulator from the system for service, you must

- **depressurize system**
- **purge the system to remove any residual system media left in the regulator**.

Disassembly

1. Place the regulator in a vise.
2. Turn the **handle** counterclockwise until it stops.
   Note: If using an antitamper nut, remove it from the body. Then turn the stem counter clockwise until it stops.
3. Loosen the **cap ring**.

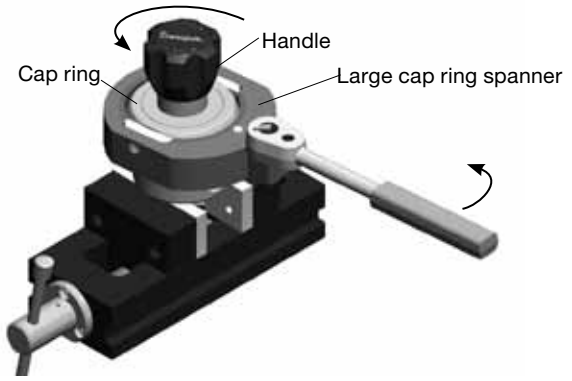

4. Remove the **cap assembly** and handle as one piece and set aside for later use.
   Note: The **range spring** may fall from the **cap assembly** when lifted. Set aside for later use.

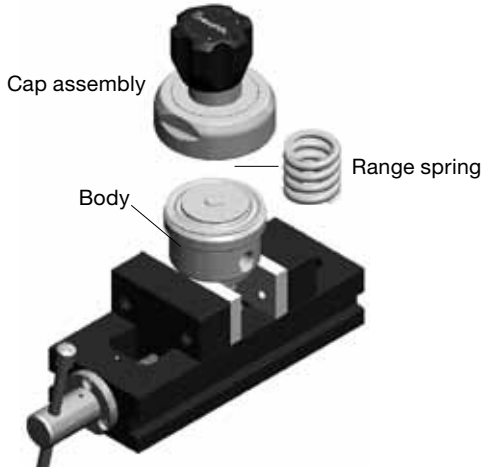

5. Remove the **diaphragm** and the **stop plate** from the **body**.

NOTICE

Do not damage the diaphragm sealing face on the body. Leakage could result.

6. Loosen and remove the **seat assembly**. Discard seat and seat retainer.

NOTICE

Be careful not to scratch the inside of the body. Leakage could result.

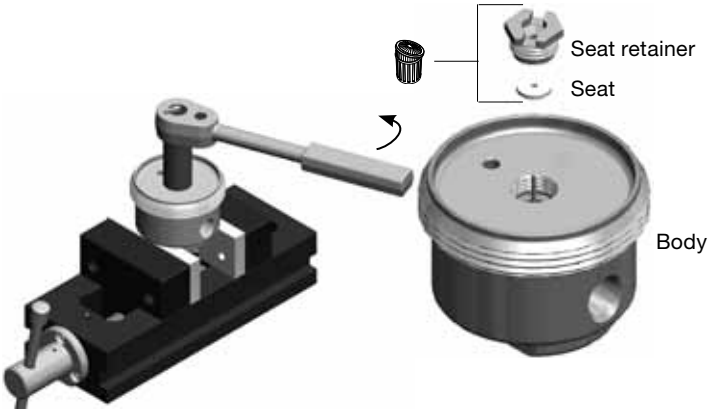

7. Invert the body and remove the **poppet**, the **poppet spring** and the **poppet damper**.

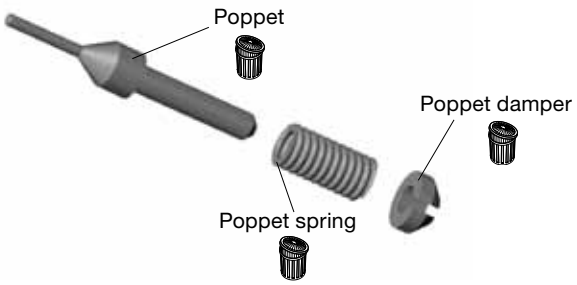

8. Remove the **inlet filter** from the **inlet port (marked 'HP')** using the **filter pick tool**. Discard old filter.

NOTICE

Be careful not to scratch the sides of the inlet port. Leakage could result.

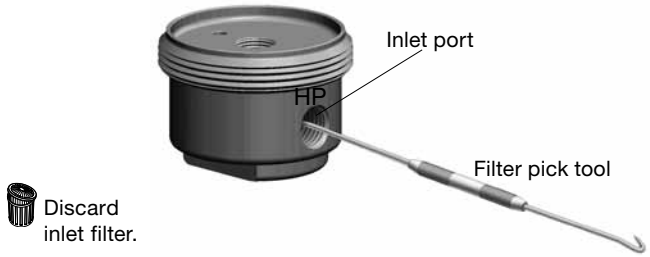

Reassembly

NOTICE

Ensure all parts and tools are free of debris or damage.

9. Insert the inlet **filter** into the **inlet** (marked 'HP') using the filter insertion tool.

NOTICE

Do not insert the inlet filter with a sharp tool. Damage to the filter could result.

10. Insert the **seat** into the **seat retainer** with the groove facing away from the seat retainer.

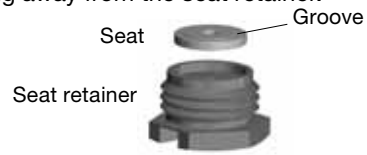

11. Place the **poppet** through the **seat**. Place the **poppet spring** and the **poppet damper** onto the exposed end of the **poppet**.

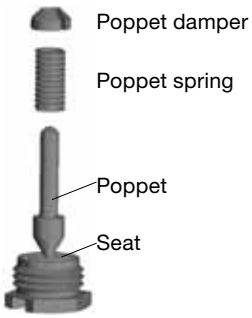

12. Invert the **body** and thread the **seat assembly** into the body.

    Note: Lubricate the seat retainer threads only. Do not contaminate the seat face or body interior with lubricant.

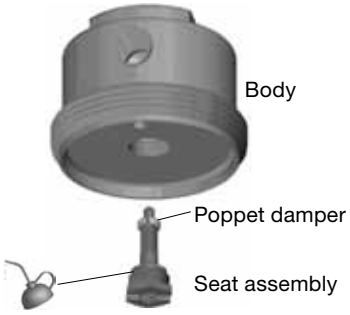

*For additional information, see **www.swagelok.com**.*

Swagelok — TM Swagelok Company
© 2011, 2014, 2015 Swagelok Company
October 2015, R3
MS-CRD-0136

13. Tighten the **seat assembly** to 13 ft·lb (17.5 N·m, 1.8 m·kg).

14. Install the **diaphragm** on the **body** with the large convolution facing towards the body.

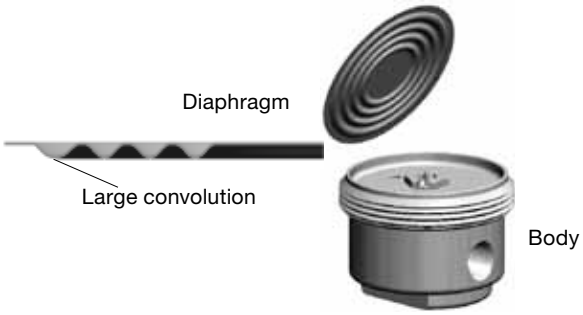

15. Install the **stop plate** onto the **diaphragm** with the **boss** on the stop plate facing away from the diaphragm.

16. Reinsert the **range spring** into the **cap assembly** if necessary.

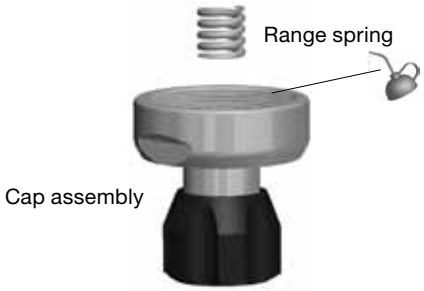

17 Tighten the **cap ring** to 236 ft·lb (320 N·m, 32.7 m·kg).

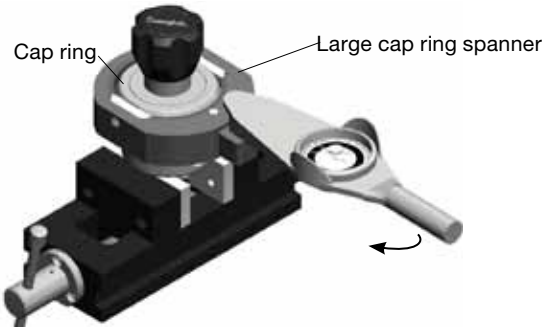

18. Test the regulator for proper operation.
19. If using an antitamper nut, thread the antitamper nut onto the stem after the set outlet pressure is reached. Tighten the nut to 13 ft·lb (17.5 N·m, 1.8 m·kg).